ORDER NO. APD-8202-591

# Service Manual

## AUTO PRODUCTS

# CQ-884EG

CASSETTE CAR STEREO TAPE PLAYER with LW/MW/FM MPX ELECTRONIC TUNER RADIO

AUTO-STEREO-CASSETTENBANDGERÄT mit LW/MW/UKW-MPX ELEKTONISCHEM TUNER-RADIO

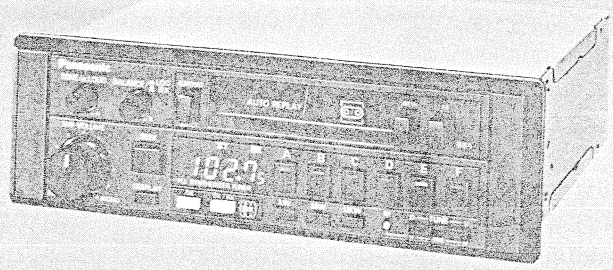

CONTENTS


| | Page |
|---|---|
| SPECIFICATIONS | 1 |
| FEATURES | 1 |
| DIMENSIONS AND LOCATION OF CONTROLS | 2 |
| INSPECTION OF ELECTRONIC TUNING FUNCTION | 6 |
| PARTS LOCATION | 9 |
| SERVICING HINT OF KEYBOARD ASS'Y | 10 |
| DISASSEMBLY INSTRUCTIONS | 12 |
| IC EQUIVALENT CIRCUIT | 14 |
| FUSE REPLACEMENT | 15 |
| BLOCK DIAGRAM | 16 |
| SCHEMATIC DIAGRAM: | |
| TUNER CONTROL BLOCK | 17 |
| TAPE & RADIO BLOCK | 18 |
| WIRING DIAGRAM: | |
| TUNER CONTROL & RADIO BLOCK | 19 |
| TAPE & VF BLOCK | 20 |
| WAVEFORM OF MICROCOMPUTER | 21 |
| OPERATION OF MICROCOMPUTER | 22 |
| ALIGNMENT INSTRUCTIONS | 24 |
| ALIGNMENT POINTS | 32 |
| SERVICING HINT OF CASSETTE DECK | 33 |
| OPERATION OF REPEATRACK & RADIO MONITORING CASSETTE DECK | 34 |
| EXPLODED VIEW (UNIT) | 35 |
| REPLACEMENT PARTS LIST | 36 |
| EXPLODED VIEW (TAPE DECK) | 38 |
| INITIAL FAILURE PARTS LIST | 51 |


INHALTSVERZEICHNIS


| | Seite |
|---|---|
| TECHNISCHE DATEN | 1 |
| MERKMALE | 1 |
| ABMESSUNGEN UND BEDIENUNGSELEMENTE | 2 |
| ÜBERPRÜFUNG DER ELEKTRONISCHEN TUNERFUNKTIONEN | 6 |
| ANWEISUNGEN FÜR DER AUSBAU | 9 |
| WARTUNG SCHINWEISE FÜR DAS TASTATUR | 10 |
| ANWEISUNGEN FÜR DER AUSBAU | 12 |
| IC-ERSATZ SCHALTBILD | 14 |
| SICHERUNG ERSATZ | 15 |
| BLOCK-SCHALTBILD | 16 |
| SCHALTBILT | |
| TUNER CONTROL & RADIO BLOCK | 17 |
| TAPE & RADIO BLOCK | 18 |
| VERDRAIITUIG | |
| TUNER CONTROL & RADIO BLOCK | 19 |
| TAPE & VF BLOCK | 20 |
| WELLENFORN DES MIKROCOMPUTERS | 21 |
| BEDIENUNG DES MIKROCOMPUTERS | 22 |
| ABGLEICH-ANLEITUNG | 28 |
| ABGLEICHPUNKTZ | 32 |
| WARTUNG SHINWEISE FÜR DAS CASSETTENDECK | 33 |
| BEDIENUNG VON WIEDERHOLSPUR UND RADIO-MONITOR-CASSETTENDECK | 34 |
| AUFGELÖSTE DARSTELLUNGS (GANZES GERÄT) | 35 |
| ERSATZTEILLISTE | 36 |
| AUFGELÖSTE DARSTELLUNGS (TONBANDGERÄT) | 38 |
| ANFANGS-FEHLER-ERSATZTEILLISTE | 51 |


Panasonic


Matsushita Electric Trading Co., Ltd.
P. O. Box 288, Central Osaka, Japan

## SPECIFICATIONS*

| | |
|---|---|
| Power Supply: | DC 12V (11 ~ 16V)<br>Test Voltage 14.4V<br>Negative Ground |
| Power Output: | 2 x 5.5W (DIN 45 324) |
| Maximum Power Output: | 2 x 8W |
| Speaker Impedance: | 2 ~ 8Ω |
| Current Consumption: | Less than 1A (at 0.5W) |
| Battery Back Up Current Consumption: | Less than 5mA |
| **Car Stereo** | |
| Resproduction System: | 4-Track, 2-Program Stereo |
| Tape Speed: | 4.76 cm/sec. |
| Fast Forward Time: | Less than 80 sec. (C-60) |
| Rewind Time: | Less than 80 sec. (C-60) |
| Frequency Response: | 31.5Hz to 12,000Hz ±3 dB |
| Wow/Flutter: | Less than 0.2% (WRMS) |
| Signal/Noise Ratio: | More than 45 dB |
| **FM Stereo Radio** | |
| Frequency Range: | 87.5 ~108MHz |
| Intermediate Frequency: | 10.7 MHz |
| Maximum Sensitivity: | Less than 4 dB/μV, (S/N 10 dB) |
| FM Stereo Sensitivity: | Less than 18 dB/μV |
| SK/BK Sensitivity: | Less than 22 dB/μV |
| **MW Radio** | |
| Frequency Range: | 531 ~ 1,602 kHz |
| Intermediate Frequency: | 450 kHz |
| Maximum Sensitivity: | Less than 26 dB/μV (0.5W) |
| **LW Radio** | |
| Frequency Range: | 153 ~ 281 kHz |
| Intermediate Frequency: | 450 kHz |
| Maximum Sensitivity: | Less than 35 dB/μV (0.5W) |
| **Clock** | |
| Accuracy: | ±30 sec./month |
| Dimensions**: | 178(W) x 140(D) x 52(H) mm |
| Weight**: | 1.6 kg |

## FEATURES

- Electronic tuning FM stereo/MW/LW radio with auto-replay cassette player.
- New DIN full frontal design.
- PLL quartz synthesizer electronic tuning.
- SK, DK and the most advanced of all BK (Direct access A to F).
- Auto-seek, 24-station preset tuning (6 BK, 6 FM, 6 MW, 6 LW).
- FMO (FM Optimizer) circuitry.
- Adaptive FM front end.
- EIA noise suppressor.
- 22-hour quartz clock/frequency digital display.
- Radio monitor switch.
- Loudness control switch.

*Specifications subject to change without notice.
**Weight and Dimensions shown are approximate.
***C-120 tape is not recommended to use.

## TECHNISCHE DATEN*

| | |
|---|---|
| Stromversorgung: | GS 12V (11 ~ 16V)<br>Testspannung 14,4V, negative<br>Batterieklemme an Masse |
| Sinusleistung: | 2 x 5.5W (DIN 45 324) |
| Muskleistung: | 2 x 8W |
| Lautsprecherimpedanz: | 2 ~ 8Ω |
| Stromverbrauch: | Weniger als 1A (bei 0,5W) |
| Stromverbrauch bei Batterieschutzfunktion: | Weniger 5mA |
| **Stereo-Cassettenspieler** | |
| Wiedergabesystem: | Viertelspur-Zweikanal-Stereo |
| Bandgeschwindigkeit: | 4,76 cm/sek. |
| Schnelvorlaufdauer: | Weniger las 80 sek. (C-60) |
| Rücklaufdauer: | Weniger als 80 sek. (C-60) |
| Frequenzgang: | 31.5 Hz ~ 12,000 Hz ±3 dB |
| Gleichlaufschwankungen: | Weniger als 0.2% (mittelwert, bewerte |
| Signal-Rauschabstand: | Meer dan 45 dB |
| **UKW-Stereo-Empfangsteil** | |
| Empfangsbereich: | 87,5 ~ 108 MHz |
| Zwischenfrequenz: | 10,7 MHz |
| Empfindlichkeit: | Weniger als 4 dB/μV<br>(Signal-Rauschabstand 10 dB) |
| UKW-Stereo Empfindlichkeit: | Weniger als 18 dB/μV |
| SK/BK Empfindlichkeit: | Weniger als 22 dB/μV |
| **MW-Empfangsteil** | |
| Empfangsbereich: | 531 ~ 1.602 kHz |
| Zwischenfrequenz: | 450 kHz |
| Empfindlichkeit: | Weniger als 26 dB/μV (0,5W) |
| **LW-Empfangsteil** | |
| Empfangsbereich: | 153 ~ 281 kHz |
| Zwischenfrequenz: | 450 kHz |
| Empfindlichkeit: | Weniger als 35 dB/μV (0,5W) |
| **Zeituhr** | |
| Ganggenauigkeit: | ±30 sek./Monat |
| Abmessungen**: | 178(B) x 140(T) x 52(H) mm |
| Gewicht**: | 1,6 kg |

## MERKMALE

- Elektronischabstimmender UKW Stereo/MW/LW Empfänger mit Kassettengerät mit automatischer Wiedergabe.
- Neue Frontalausführung nach DIN.
- Elektronische Abstimmung mit PLL Quartzsynthese.
- SK, DK und das höchstfortgeschrittene BK (mit direktem Zugang von A bis F).
- Automatisches Suchen, 24 Stationvoreinstell-Abstimmen (6 BK, 6 UKW, 6 MW, 6 LW).
- FMO (UKW Optimierung) Schaltung.
- Anpassungsfähige UKW Stirnseite.
- EIA Rauschunterdrücker.
- 22-stündliche Quartzuhr/Frequenzdigitale Anzeige.
- Rundfunkabhörschalter.
- Lautstärkeschalter.

*Änderungen vorbehalten.
**Gewicht und Abmessungen in annäherunden Werten angegeben
***C-120-Cassetten ist nicht zu empfehler.

## DIMENSIONS AND LOCATON OF CONTROLS/ABMESSUNGEN UND BEDIENUNGSELEMENTE

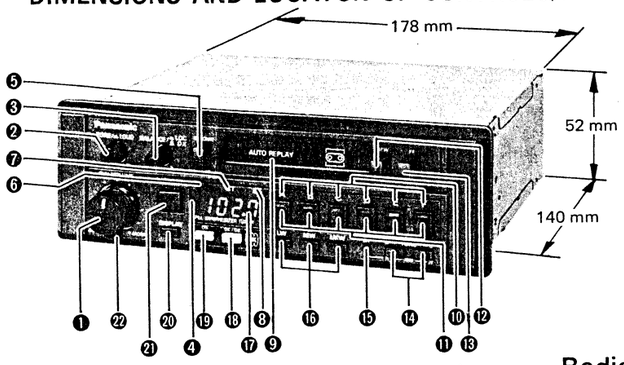


❶Power Switch/Volume Control
❷Tone Control/Loudness Control
❸Balance Control/Local-DX Selector
❹Display Button
❺Eject/Radio Monitor Button
❻Tape Play Indicator
❼FM Stereo Indicator
❽SK Indicator
❾Tape Slot
❿Area Indicator
⓫Preset Station Button
⓬Rewind Button
⓭Fast Forward Button
⓮Tune
⓯Memory Button
⓰Band Selector
⓱Frequency/Clock Display
⓲SK/BK Button
⓳DK Button
⓴Display Button
㉑Seek
㉒Mono/Auto Selector

## Informations on Principal Controls

1. POWER SWITCH/VOLUME CONTROL ❶ (SW•VOLUME)

Turn the POWER SWITCH ❶ clockwise to switch the power to the unit on. (The radio frequency will automatically appear on the FREQUENCY/CLOCK DISPLAY ⓱.) Progressive rotation (clockwise) increases the volume. To switch off, turn the knob counter-clockwise.

2. TONE CONTROL/LOUDNESS CONTROL ❷ (TONE/LOUD)

This knob has two functions, namely; a TONE control and a LOUDNESS control. They are described as follows;

- TONE CONTROL
  Turn the knob to the left for increased bass, and turn to the right for increased treble.
- LOUDNESS CONTROL
  This control is devised to compensate human hearing deficiency, in high and low frequency regions when volume is low. Depress the knob in ( ▬ ) when listening at low volume, and when listening at high volume press the knob again ("out" position).

3. BALANCE CONTROL/LOCAL-DX SELECTOR ❸ (BALANCE/LOC. DX)

This knob has two functions, namely; a BALANCE control and a LOCAL-DX selector. They are described as follows;

- BALANCE CONTROL
  Turn the knob to the left and right until the sound balance of the left and right speakers are about equal from your listening position.
- LOCAL-DX SELECTOR
  When there are too many stations (while tuning), set the knob to the "LOC" position by pushing the knob in ( ▬ ).

4. DISPLAY BUTTON ⓴ (DISPLAY)

Normally when the POWER SWITCH ❶ is turned on (or when the BAND SELECTOR ⓰ or PRESET STATION BUTTONS ⓫ is switched to another program), the radio frequency will automatically appear on the FREQUENCY/CLOCK DISPLAY ⓱. However, to know what time it is, simply push the DISPLAY BUTTON ⓴, and the time will appear on the FREQUENCY /CLOCK DISPLAY ⓱ continuously. Push the DISPLAY BUTTON ⓴ for the display of the radio frequency.

## To Set the Time

FIRST, push the DISPLAY BUTTON ⓴ and the time will be shown on the FREQUENCY/CLOCK DISPLAY ⓱.

1. HOUR SETTING

While pushing the MEMORY "M" BUTTON ⓯, push the TIME "H" BUTTON ⓮. The hour will successively change while the button is pushed and is shown on the FREQUENCY/CLOCK DISPLAY ⓱. (i.e. from "0" to "23" and back to "0" again). (Fig. 1)



## Bedienungselemente und ihre Funktion

1. STROMSCHALTER/LAUTSTÄRKEREGLER ❶ (SW•VOLUME)

Den STROMSCHALTER ❶ im Uhrzeigersinn drehen, um die Stromversorgung einzuschalten. Die Empfangsfrequenz erscheint automatisch in der FREQUENZ/ ZEITANZEIGE ⓱. Den Knopf weiter im Uhrzeigersinn drehen, um die Lautstärke zu erhöhen. Um die Stromversorgung abzuschalten, den Knopf bis in seine Raststellung gegen den Uhrzeigersinn drehen.

2. KLANGREGLER/GEHÖRRICHTIGE LAUTSTÄRKEKORREKTUR ❷ (TONE/LOUD)

Diese Knopf dient sowohl als Klangregler als auch als gehörrichtige Lautstärkekorrektur. Diese beiden Funktionen sind nachfolgend beschrieben:

- KLANGREGLER
  Den Knopf nach links oder rechts drehen, um die Bässe bzw. die Höhen zu betonen.
- GEHÖRRICHTIGE LAUTSTÄRKEKORREKTUR
  Bei kleiner Lautstärke ist das menschliche Ohr relativ umempfindlich gegenüber niedrigen und hohen Frequenzanteile. Um daher die genannten Frequenzanteile bei kleiner Lautstärke zu betonen und ein natürliches Klangbild herzustellen, diesen Knopf einrasten ( ▬ ). Für große Lautstärke ist der Knopf durch nochmaliges Drücken wieder freizugeben.

3. BALANCEREGLER/SCHALTER FÜR NAH-/FERNEMPFANG ❸ (BALANCE/LOC. DX)

Auch dieser Knopf weist zwei Funktionen auf; er dient als Balanceregler und als Wahlschalter für Nah-/Fernempfang, wie es nachfolgend beschrieben ist.

- BALANCEREGLER (BALANCE)
  Den Knopf nach links oder rechts drehen, bis die Lautstärke der linken und rechten Lautsprecher etwa gleich erscheint.
- WAHLSCHALTER FÜR NAH-/FERNEMPFANG
  Für den Empfang feldstarker Ortssender ist der Knopf einzurasten ( ▬ ), d.h. auf Position "LOC" zu stellen. Für Fernempfang den Knopf durch nochmaliges Drücken wieder freigeben.

4. ANZEIGETASTE ⓴ (DISPLAY)

Mit dem Einschalten des STROMSCHALTERS ❶ (oder wenn der EMPFANGSBEREICHWÄHLER ⓰ umgeschaltet bzw. eine andere FESTSENDERTASTE ⓫ betätigt wird) erscheint die Empfangsfrequenz automatisch in der FREQUENZ/ZEITANZEIGE ⓱. Um aber die Uhrzeit anzuzeigen, einfach die ANZEIGETASTE ⓴ drücken. Sobald wiederum die Empfangsfrequenz in der FREQUENZ/ZEITANZEIGE ⓱ angezeigt werden soll, die ANZEIGETASTE ⓴ nochmals betätigen.

## Einstellen der Uhrzeit

ZUERST ist die ANZEIGETASTE ⓴ zu drücken, um die Uhrzeit in der FREQUENZ/ZEITANZEIGE ⓱ anzuzeigen.

1. STUNDENEINSTELLUNG

Die SPEICHERTASTE "M" ⓯ gedrückt halten und die STUNDENTASTE "H" ⓮ betätigen. Die Stundenanzeige in der FREQUENZ/ZEITANZEIGE ⓱ wird bei gedrückter Taste kontinuierlich weitergerückt (d.h. von "0" bis auf "23" und wiederum ab "0"). (Abb. 1)

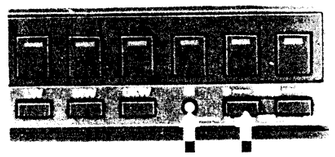

Fig. 1

2. MINUTE SETTING

While pushing the MEMORY "M" BUTTON ⓯, push the TIME "M" BUTTON ⓮. The minute will successively change while the button is pushed, and is shown on the FREQUENCY/CLOCK DISPLAY ⓱. (i.e. from "00" to "59" and back to "00" again) (Fig. 2)

NOTE: Setting the time cannot be done during tape playback. It should be done when the unit is in the "radio" mode.

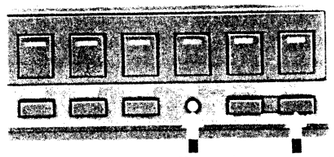

Fig. 2

## To Set the Preset Station Button

1. Turn the POWER SWITCH ❶ clockwise to switch the power to the unit on.
2. Adjust the VOLUME CONTROL ❶ by turning the knob clockwise until you can hear noise or radio broadcasts from the speakers.
3. Set the BAND SELECTOR ⓰ to your desired radio band.
   LW: For LW radio band; from 153kHz to 281kHz.
   MW: For MW radio band; from 531kHz to 1602kHz.
   UKW: For FM radio band; from 87.5MHz to 108MHz.
   VF: For traffic-information broadcasts only on the FM band; from 87.5MHz to 108MHz.
   (See "SK/BK, DK (VF) Operation" section on page 4.)

NOTES:

a) For FM radio band, if the broadcast is in "FM stereo", the FM STEREO INDICATOR ❼ (S T) will automatically light up. (The MONO/AUTO SELECTOR ㉒ should be in "AUTO" position.)
b) In weak FM signal areas, set the MONO/AUTO SELECTOR ㉒ to "MONO" position to improve the reception.

4. Tune in to the desired station. Two types of tuning can be obtained through the TUNE ⓮ and SEEK ㉑.
   TUNE ⓮ is used for manual tuning of radio frequency, while SEEK ㉑ is for automatic tuning. Proceed by following either one of these two TYPES of tuning.

### A) SEEK TUNING

Each time the SEEK ㉑ is pushed in, seek tuning is automatically done and will stop on the appropriate radio frequency of the broadcasting radio station (Fig. 3). If the knob is pushed again, the next radio station will come out automatically. The seek tuning will count up in sequence only. The radio frequency will be shown in the FREQUENCY/CLOCK DISPLAY ⓱.

NOTE: If you feel there are too many stations, set the LOCAL/DX SELECTOR ❸ to "LOC" ( ▬ ) position (Fig. 4).

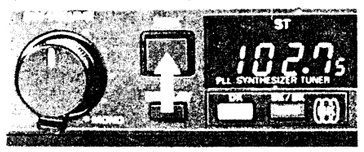


Fig. 3

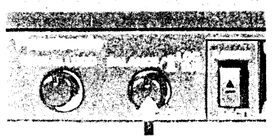

Fig. 4

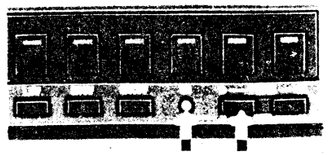

Abb. 1

2. MINUTENEINSTELLUNG

Die SPEICHERTASTE "M" ⓯ gedrückt halten und die MINUTENTASTE "M" ⓮ betätigen. Die Minutenanzeige in der FREQUENZ/ZEITANZEIGE ⓱ wird bei gedrückter Taste kontinuierlich weitergerückt (d.h. von "00" bis auf "59" und wiederum ab "00"). (Abb. 2)

HINWEIS: Die Uhrzeit kann nur bein Rundfunkempfang, nicht aber bei Tonband-Wiedergabe eingestellt werden.

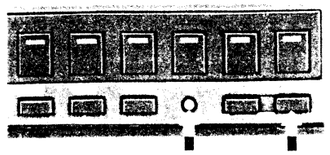

Abb. 2

## Vorprogrammieren der Festsendertasten

1. Den STROMSCHALTER ❶ im Uhrzeigersinn drehen, um die Stromversorgung einzuschalten.
2. Den LAUTSTÄRKEREGLER ❶ auf die gewünschte Lautstärke einstellen.
3. Den EMPFANGSBEREICHWÄHLER ⓰ auf den gewünschten Empfangsbereich einstellen.
   LW: Langwelle von 153 kHz bis 281 kHz
   MW: Mittelwelle von 531 kHz bis 1.602 kHz
   UKW: Ultra-Kurzwelle von 87,5 MHz bis 108 MHz
   VF: Nur für Verkehrsfunkinformationen im UKW-Bereich von 87,5 MHz bis 108 MHz (siehe "Empfang von Verkehrsfunkinformationen" auf Seite 12).

HINWEISE:

a) Wird ein UKW-Stereo-Programm empfangen, dann leuchtet automatisch die UKW-STEREO-ANZEIGE ❼ (S T) auf (der MONO/AUTO-UMSCHALTER ㉒ muß dabei auf Position "AUTO" gestellt sein).
b) Bei einem schwach und verrauscht einfallenden UKW-Stereo-Programm ist der MONO/AUTO-UMSCHALTER ㉒ auf Position "MONO" zu stellen, wodurch der Empfang verbessert wird (nun aber nur noch in MONO).

4. Nun auf den Sender Ihrer Wahl abstimmen. Dazu stehen zwei Verfahren zur Verfügung: Automatischer Sendersuchlauf mittels SUCHLAUFTASTE ㉑ (SEEK) bzw. manuelle Senderwahl mit Hilfe der ABSTIMMTASTE ⓮ (TUNE).

### A) AUTOMATISCHER SENDERSUCHLAUF

Die SENDERSUCHLAUFTASTE ㉑ drücken, worauf der eingestellte Empfangsbereich bis zum nächsten Sender durchlaufen wird (Abb. 3). Diese Taste nochmals drücken, wenn auf den nächsten Sender weitergeschaltet werden soll. Automatischer Sendersuchlauf ist nur in einer Richtung möglich, d.h. die Abstimmfrequenz wird jeweils erhöht. Die eingestellte Empfangsfrequenz wird in der FREQUENZ/ZEITANZEIGE ⓱ angezeigt.

HINWEIS: Für den Empfang von starken Ortssendern ist der Schalter für NAH-/FERNEMPFANG ❸ auf Position LOC" ( ▬ ) zu stellen (Abb. 4).

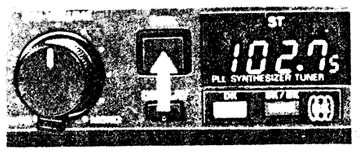


Abb. 3

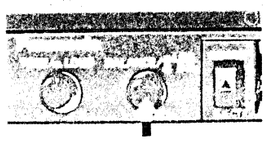

Abb. 4

B) MANUAL TUNING

If the right side "U" of the TUNE ⑫ is pushed, the radio frequency on the FREQUENCY/CLOCK DISPLAY ⑰ will count up (Fig. 5). If the left side "D" is pushed, the radio frequency will count down (Fig. 6). When pushed continuously (either "U" or "D"), the radio frequency will count up or down in rapid movement, accordingly. And if your fingers are released, the radio frequency will stop instantly at that position.

NOTE: For FM reception, if the bar is pushed one time on the "U" side, the radio frequency will count 50kHz up; or if pushed on the "D" side, it will count 50kHz down. For MW reception, it will count 9kHz up or down in sequence. For LW reception, it will count 1kHz up or down in sequence.

RADIO FREQUENCY WILL COUNT UP — RADIO FREQUENCY WILL COUNT DOWN

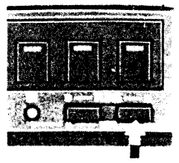
Fig. 5

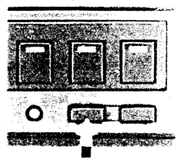
Fig. 6

5. To "preset" a station onto the PRESET STATION BUTTON ⑪:
Six stations for each radio band (LW, MW, FM) can be preset on these six buttons, respectively. To set a station in memory, proceed as follows;
Push the MEMORY BUTTON (M) ⑮ (Fig. 7).
The MEMORY INDICATOR ❹ on the FREQUENCY/CLOCK DISPLAY ⑰ will light up. Push one of the PRESET STATION BUTTONS ⑪ where you want it memorized (Fig. 8).

NOTE:
Preset stations are kept memorized on the PRESET STATION BUTTON ⑪ even if the ignition key of your car is switched to "OFF".

6. To set a second station in memory, follow steps 4 and 5 again, but this time push a different preset station button. Each radio band can select 6 stations. Thus, the 6 preset station buttons can be used to select a total of 18 stations [6 for LW, 6 for MW and 6 for FM (UKW)]. (The six preset station buttons can also be used for six "VF" radio stations.)

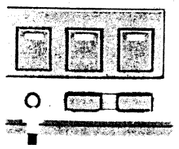

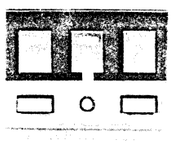

## SK/BK, DK (VF) Operation

**[Traffic-Information radio stations on the FM (UKW) radio band]**

1. TUNING IN TO THE TRAFFIC-INFORMATION BROADCASTS
Push the "SK/BK" BUTTON ⑱. At this stage, all the AREA INDICATORS ⑩ "A" up to "F" (located on top of each of the DESIGNATED AREA BUTTONS ⑪) will light up, and the radio will be put at the traffic-information broadcasting mode. The six PRESET STATION BUTTONS ⑪ will become DESIGNATED AREA "A" up to "F" BUTTONS ⑪. (Fig. 9).

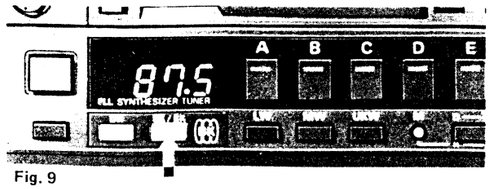

Fig. 9

B) MANUELLE SENDERWAHL

Die mit "U" oder 'D" bezeichnete ABSTIMMTASTE ⑫ drücken, um die eingestellte, in der FREQUENZ/ ZEITANZEIGE ⑰ angezeigte Frequenz zu erhöhen bzw. zu vermindern. Wird eine der beiden genannten Tasten gedrückt gehalten, dann ändert die Empfangsfrequenz kontinuierlich in der entsprechenden Richtung. Sobald Sie die entsprechende Taste freigeben, ist die Senderwahl beendet. (Abb. 5, 6)

HINWEIS: Durch Drücken der mit "U" oder "D" bezeichneten Abstimmtaste wird die angezeigte Frequenz jeweils um einen Rasterschritt erhöht bzw. vermindert. Diese Rasterschritte betragen 50 kHz für UKW, 9 kHz für MW bzw. 1 kHz für LW.

EMPFANGSFREQUENZ WIRD ERHÖHT — EMPFANGSFREQUENZ WIRD VERMINDERT

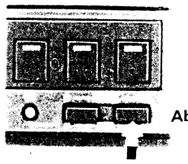
Abb. 5

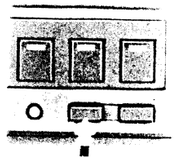
Abb. 6

5. VORPROGRAMMIEREN DER FESTSENDERTASTEN ⑪:
Auf jede der sechs Festsendertasten kann jeweils eine LW-, MW- und UKW-Station wie folgt vorprogrammiert werden:
Die SPEICHERTASTE "M" ⑮ drücken (Abb. 7).
Die SPEICHERANZEIGE ❹ in der FREQUENZ/ZEITANZEIGE ⑰ leuchtet auf. Nun die gewünschte FESTSENDERTASTE ⑪ drücken, auf die die eingestellte Rundfunkstation vorprogrammiert werden soll (Abb. 8)

HINWEIS: Einmal vorprogrammiert bleiben die eingestellten Sender der FESTSENDERTASTEN ⑪ auch dann erhalten, wenn Sie den Zündschlüssel Ihres Fahrzeuges abschalten.

6. Die übrigen Festsendertasten gemäß Beschreibung in den Schritten 4 und 5 auf andere Stationen vorprogrammieren. Für jeden Empfangsbereich können jeweils 6 Sender vorprogrammiert werden (LW x 6 MW x 6 und UKW x 6), so daß insgesamt 18 Festsender zur Verfügung stehen. (Die sechs Festsendertasten können auch auf Sender eingestellt werden, die Verkehrsfunkinformationen austrahlen.)

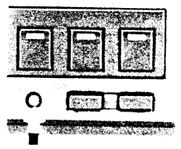
Abb. 7

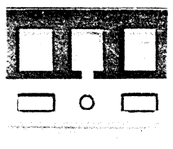
Abb. 8

## Empfang von Verkehrsfunkinformationen [SK/BK, DK(VF)]

**(Empfang von UKW-Sendern, die Verkehrsfunkinformationen ausstrahlen)**

1. ABSTIMMEN AUF VERKEHRSFUNKSTATIONEN
Die SK/BK-TASTEN ⑱ drücken, wodurch die über den FESTSENDERTASTEN ⑪ angeordneten GEBIETSANZEIGEN "A" bis "F" ⑩ aufleuchten und das Radio auf Verkehrsfunkempfang geschaltet wird. Die Sechs FESTSENDERTASTEN ⑪ dienen nun als GEBIETSBEZEICHNUNGSTASTEN "A" bis "F" (Abb. 9).

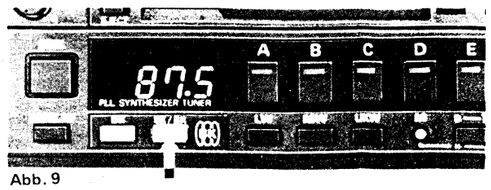

Abb. 9



Tune in the traffic-information broadcast by SEEK TUNING (or MANUAL TUNING).
The "SK" INDICATOR ❽ will light up when the broadcasting station is tuned in. At the same time, the traffic-information broadcasting station is indicated by a red lamp located on the corresponding DESIGNATED AREA BUTTON ⑪. The tuned in traffic-information broadcast is automatically preset (memorized) on the DESIGNATED AREA BUTTON. (In "SK/BK" mode, the memory "M" BUTTON ⑮ will not function.) (Fig. 10)

NOTE: The other DESIGNATED AREA BUTTONS ⑪ will operate in the same manner when tuning to another traffic-information broadcasts depending upon their broadcasting areas. Otherwise called, the "SK" SEEKING.

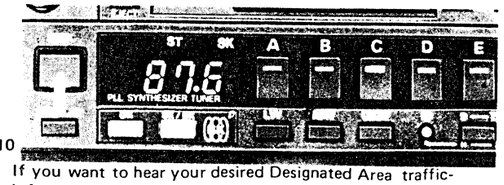

Fig. 10

If you want to hear your desired Designated Area traffic-information, select that designated area and push the corresponding DESIGNATED AREA BUTTON ⑪. (Fig. 11)
Then you will hear the traffic-information in that area which was previously entered (memorized) into that button.

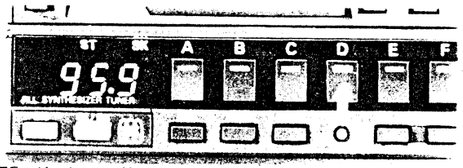

Fig. 11

NOTE: If the traffic-information broadcasting station cannot be received due to weak signal when the desired DESIGNATED AREA BUTTON ⑪ is pushed, the "SK" INDICATOR ❽ will not light up. In this case, push that same button again in order to seek another station automatically on your desired same designated area. Otherwise called, the "BK" SEEKING. The newly seeked traffic-information broadcasting station will be automatically memorized on that button.

2. RECEPTION OF TRAFFIC-INFORMATION
[To listen to the traffic-information broadcasts only]
a) Radio Reception
Push the "DK" BUTTON ⑲. (Fig. 12)
In this case, the traffic-information broadcasts can be heard only.
b) During tape play
The "SK INDICATOR ❽ remain lighting up and the traffic-information broadcast can still be heard automatically even when the "DK" BUTTON ⑲ is not pushed.

NOTES:
a) If you drive away from the tuned in traffic-information broadcast, the signal will become weak and the "SK" INDICATOR ❽ will cease to light. In this case, a "beep" sound can be heard. To listen to another traffic-information broadcast, tune in to another station by following the previous explanation.
b) During tape play, a "beep" sound can be heard also when the same situation happened as explained above. Moreover, even while playing tape, the SEEK BUTTON ㉑ will operate to find another traffic-information broadcast.

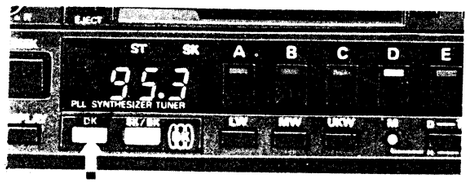

Fig. 12

Nun mittels elektronischem Sendersuchlauf oder manueller Abstimmung die gewünschte Verkehrsfunkstation einstellen. Sobald eine Verkehrsfunkstation eingestellt ist, leuchtet der SK-ANZEIGER ❽ auf; gleichzeitig wird die Verkehrsfunkstation durch Aufleuchten der auf der entsprechenden GEBIETSBEZEICHNUNGSTASTE ⑪ angeordneten roten Lampe angezeigt. Die nun eingestellte Verkehrsfunkstation wird nun automatisch auf die entsprechende Gebietsbezeichnungstaste vorprogrammiert. (Bei SK/BK-Betrieb arbeitet die SPEICHERTASTE "M" ⑮ nicht.) (Abb. 10)

HINWEIS: Auf die gleiche Weise können die übrigen GEBIETSBEZEICHNUNGSTASTEN ⑪ auf andere Verkehrsfunkstationen mit Senderkennung (SK) vorprogrammiert werden.

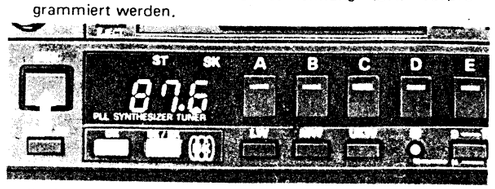

Abb. 10

Falls Sie nun die Verkehrsfunkstation des gewünschten Gebietes empfangen möchten, einfach die entsprechende GEBIETSBEZEICHNUNGSTASTE ⑪ drücken (Abb. 11), auf die die gewünschte Station vorprogrammiert wurde.

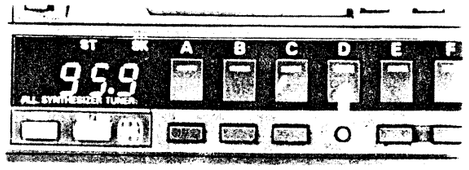

Abb. 11

HINWEIS: Falls bei schwach einfallender Verkehrsfunkstation die GEBIETSBEZEICHNUNGSTASTE ⑪ gedrückt wird, leuchtet die SK-ANZEIGE ❽ nicht auf. In diesem Fall ist die gleiche Taste nochmals zu drücken, um automatisch auf eine andere Station des gleichen Gebietes abzustimmen. Die neu eingestellte Station mit Bandkennung (BK) wird dadurch automatisch auf diese Taste vorprogrammiert.

2. EMPFANG VON VERKEHRSFUNKINFORMATIONEN
(Empfang nur von Verkehrsfunkdurchsagen)
a) Rundfunkempfang
Die DK-TASTE ⑲ drücken (Abb. 12). Dadurch können nur Sender mit Durchsagenkennung (DK) empfangen werden.
b) Tonband-Wiedergabe
Die SK-ANZEIGE ❽ verbleibt eingeschaltet und die Verkrhsfunkdurchsage kann auch während der Tonband-Wiedergabe vernommen werden, auch wenn die DK-TASTE ⑲ nicht eingerastet ist.

HINWEISE:
a) Mit zunehmender Entfernung von der eingestellten Verkehrsfunkstation nimmt die Signalstärke ab, bis schließlich die SK-ANZEIGE ❽ erlischt und ein Kontrollton ertönt. Um auf eine andere Verkehrsfunkstation umzuschalten, die Abstimmung gemäß vorhergehender Beschreibung durchführen.
b) Dieser Kontrollton kann unter den gleichen Bedingungeauch während der Tonband-Wiedergabe vernommen werden. Die SUCHLAUFTASTE ㉑ kann auch bei Tonband-Wiedergabe verwendet werden, um eine neue Verkehrsfunkstation aufzufinden.

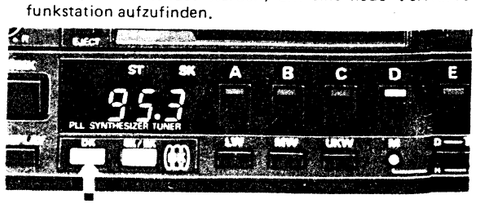

Abb. 12

## INSPECTION OF ELECTRONIC TUNING FUNCTION/ÜBERPRÜFUNG DER ELEKTRONISCHEN ABSTIMMFUNKTION

### INSPECTION CONDITIONS:

- Power supply Voltage: DC 14.4 V
- Stereo/Mono Selector Switch: STEREO (AUTO)
- DX/LOC Selector Switch: OFF
- Loudness Switch: OFF
- Cassette Tape: Ejected
- Power Switch: OFF (at starting)

### INSPEKTIONSZUSTAND:

- Stromspannung 14.4 V Gleichstrom
- Stereo/Mono Wahlschalter: STEREO (AUTO)
- DX/LOC Wahlschalter: OFF
- Loudness-Schalter: OFF
- Cassettenband: Ausgeworfen
- Stromschalter: OFF (zum Anfang)

### 1. Power Switch & Clock Function

| | Procedure | Display |
|---|---|---|
| 1 | ———— | No display |
| 2 | Turn power SW on. | 87.5 |
| 3 | Depress display button (D) | 2:00 (Present Time) |
| 4 | Depress TIME "H" button with memory "M" button depressed. | • Memory colon lights up. • Time counts up by a 1-hour step (0 ~ 23). |
| 5 | Depress TIME "M" button with memory "M" button depressed. | • Memory colon lights up. • Time counts up by a 1-minute step (0 ~ 59). |

### 1. Stromschalter u. Zeitgeberfunktion

| | Verfahren | Anzeige |
|---|---|---|
| 1 | ———— | Keine Anzeige |
| 2 | Stromschalter einschalten | 87.5 |
| 3 | Anzeigetaste (D) niederdrücken | 2:00 |
| 4 | Den Zeittaster (TI-ME) "H" niederdrücken, mit MEMORY "M" Taste niedergedrückt | •MEMORY Doppelpunkt leuchtet auf •Zeitzählen mit 1-stündigen Stufen (0-23) |
| 5 | Den Zeittaster "M" niederdrücken mit MEMORY-Taster "M" nidergedrückt | •Der MEMORY Doppelpunkt leuchtet auf •Zeitzählen in 1-Minutenstufen (0-59). |

### 2. Manual Tuning Function

| | Procedure | Display |
|---|---|---|
| 1 | Depress LW button. | 155 |
| 2 | Depress TUNE "D" button. | Frequency counts down by a 1 kHz step in 153 ~ 281 kHz. |
| 3 | Depress TUNE "U" button. | Frequency counts up by a 1 kHz step in 153 ~ 281 kHz. |
| 4 | Depress MW button. | 531 |
| 5 | Depress TUNE "D" button. | Frequency counts down by a 9 kHz step in 531 ~ 1602 kHz. |
| 6 | Depress TUNE "U" button. | Frequency counts up by a 9 kHz step in 531 ~ 1602 kHz. |
| 7 | Depress UKW button. | 87.5 |
| 8 | Depress TUNE "D" button | Frequency counts down by a 0.05 MHz step in 87.5 ~ 108.0 MHz. |
| 9 | Depress TUNE "U" button | Frequency counts up by a 0.05 MHz step in 87.5 ~ 108.0 MHz. |
| 10 | During TUNE "D" or "U" button is depressing..... | Silences due to muting circuit. |

### 2. Handabstimmungfunktion

| | Verfahren | Anzeige |
|---|---|---|
| 1 | LW Taste niederdrücken | 155 |
| 2 | TUNE "D" Taste niederdrücken | Frequenz wird in 1 kHz Stufen abgezahlt |
| 3 | TUNE "U" Taste niederdrücken | Frequenz wird in 1 kHz Stufen aufgezählt von 153-281 kHz |
| 4 | MW Taste niederdrücken | 531 |
| 5 | TUNE "D" Taste niederdrücken | Frequenz wird in 9 kHz Stufen heruntergezählt, von 53 bis 1602 kHz. |
| 6 | TUNE "U" Taste niederdrücken | Frequenz wird in 9 kHz Stufen aufgezählt, von 53 bis 1602 kHz |
| 7 | Die UKW Taste niederdrücken | 87.5 |
| 8 | TUNE "D" Taste niederdrücken | Frequenz wird in 0.05 MHz Sufen heruntergezählt von 87,5 bis 108,0 MHz |
| 9 | TUNE "U" Taste niederdrücken | Frequenz wird in 0,05 MHz Stufen von 87,5 bis 108,0 MHz aufgezählt |
| 10 | Während die TUNE "D" und TUNE "U" niedergedrückt sind | Tonpausen wegen der automatischen Rauschsperre |



### 3. Search Function, MW

| | Procedure | Display |
|---|---|---|
| 1 | Depress MW button. | 531 |
| 2 | Depress SEEK button. | Frequency counts up by a 9 kHz step. |
| 3 | When broadcasting station is received. | Automatically stops. |
| 4 | During SEEK tuning..... | Silences due to muting circuit. |
| 5 | Search sensitivity..... | 29 dB or more (in DX) |
| 6 | Depress SEEK button during antenna off. | Does not stop between 531 and 1602 kHz. |

### 3. Suchfunktion

| | Verfahren | Anzeige |
|---|---|---|
| 1 | MW-Taste niederdrücken | 531 |
| 2 | SEEK-Taste niederdrücken | Frequenz wird um eine 9 kHz Stufe heraufrezählt |
| 3 | Wenn eine Rundfunkstation empfangen wird | Bleibt automatisch stehen |
| 4 | Während SEEK Abstimmen | Tonpause wegen der automatischen Rauschsperre |
| 5 | Schempfindlichkeit | 29 dB oder höher (im DX) |
| 6 | SEEK-Taste niederdrücken, während die Antenne ausgeschalteit ist | Kommt zwischen 531 und 1602 nicht zum Stillstand |

### 4. Search Function, LW

| | Procedure | Display |
|---|---|---|
| 1 | Depress LW button. | 155 |
| 2 | Depress SEEK button. | Frequency counts up by a 9 kHz step. |
| 3 | When broadcasting station is received. | Automatically stops. |
| 4 | During SEEK tuning..... | Silences due to muting circuit. |
| 5 | Search sensitivity..... | 29 dB or more (in DX) |
| 6 | Depress SEEK button during antenna off. | Does not stop between 155 and 281 kHz. |

### 4. Schfunktion LW

| | Verfahren | Anzeige |
|---|---|---|
| 1 | LW-Taste niederdrücken | 155 |
| 2 | SEEK-Taste niederdrücken | Frequenz wird um eine 9 kHz Stufe heraufgezählt |
| 3 | Wenn eine Rundfunkstation empfangen wird | Kommt automatisch zum Stehen |
| 4 | Während SEEK Abstimmen | Tonpause wegen der automatischen Rauschsperre |
| 5 | Suchempfindlichkeit | 29 dB oder höher (im DX) |
| 6 | SEEK-Taste niederdrücken, während die Antenne ausgeschaltet ist | Bleibt zwischen 155 und 281 kHz nicht stehen |

### 5. Search Function, UKW

| | Procedure | Display |
|---|---|---|
| 1 | Depress SEEK button | 87.5 |
| 2 | Depress SEEK button. | Frequency counts up by a 0.05 MHz. |
| 3 | When broadcasting station is received. | Automatically stops. |
| 4 | During SEEK tuning ..... | Silences due to muting circuit. |
| 5 | Search sensitivity ..... | 25 dB or more (in DX) |
| 6 | Depress SEEK button during antenna off. | Does not stop between 87.5 and 108.0 MHz. |

### 5. Suchfunktion UKW

| | Verfahren | Anzeige |
|---|---|---|
| 1 | UKW-Taste niederdrücken | 87.5 |
| 2 | SEEK-Taste niederdrücken | Frequenz wird in 0,05 MHz Stufen heraufgezählt |
| 3 | Bei Empfang einer Rundfunkstation | Bleibt automatisch stehen |
| 4 | Während SEEK Abstimmung | Tonpause wegen der automatischen Rauschsperre |
| 5 | Suchempfindlichkeit | 25 dB oder höher (in DX) |
| 6 | SEEK-Taste niederdrücken, wenn die Antenne ausgeschaltet ist | Bleibt zwischen 87.5 und 108.0 nicht stehen |

## 6. Memory Function

| | Procedure | Display |
|---|---|---|
| 1 | Depress MW button. | 531 |
| 2 | Depress memory "M" button when receiving. | Memory colon lights up. |
| 3 | Depress one of each preset buttons. | Memory colon dislights. Preset indicator lights up. |
| 4 | Change frequency and depress each preset button. | ——— |
| 5 | Depress LW button. | 155 |
| 6 | Same as the 2 to 4. | ——— |
| 7 | Depress UKW button. | 87.5 |
| 8 | Same as the 2 to 4 | ——— |
| 9 | When depressing preset button..... | Silences due to muting circuit. |

## 6. Speicherfunktion

| | Verfahren | Anzeige |
|---|---|---|
| 1. | MW-Taste niederdrücken | 531 |
| 2. | MEMORY "M" nieder-drücken beim Empfang | MEMORY Doppelpunkt leuchtet auf |
| 3. | Eine der Voreinstellasten niederdrücken | MEMORY Doppelpunkt erlischt, Voreinstellanzeige leuchtet auf |
| 4. | Die Frequenz ändern und eine der Voreinstelltasten drücken | ——— |
| 5. | LW-Taste niederdrücken | 155 |
| 6. | 2 bis 4 wiederholt | ——— |
| 7. | UKW-Taste niederdrücken | 87.5 |
| 8. | 2 bis 4 wiederholt | ——— |
| 9. | Während die Voreinstell-tasten niedergedrückt sind | Tonpausen wegen der auto-matischen Rauschsperre |

O : Signal & Output, or able to display & search
X : No Signal & Output, or no display & search
/ : No function

*1 : LED lights on last 1 station
*2 : Dislights at search stop
*3 : No area selection
*4 : same area as station

## 7. VF Function

| Mode | UKW Modulation | | | | | Search | | Display | | | | | | Audio Output | | | |
|---|---|---|---|---|---|---|---|---|---|---|---|---|---|---|---|---|---|
| | L+R | PILOT | SK | BK | DK | SEEK | BK | PLAY | ST | SK | BK | Area Code | Preset | MONO | MPX | Alarm | Tape |
| UKW | O | X | X | X | X | O | / | X | X | X | X | X | X*1 | O | X | X | X |
| | O | O | X | X | X | O | / | X | O | X | X | X | X*1 | X | O | X | X |
| | O | O | O | X | X | O | / | X | O | X | X | X | X*1 | X | O | X | X |
| | O | O | O | O | X | O | / | X | O | X | X | X | X*1 | X | O | X | X |
| | O | O | O | O | O | O | / | X | O | X | X | X | X*1 | X | O | X | X |
| SK/BK | X | X | X | X | X | X | X | X | X | X | O | O | X*1 | X | X | X | X |
| | O | X | X | X | X | X | X | X | X | X | O | O | X*1 | X | X | X | X |
| | O | O | X | X | X | X | X | X | X | X | O | O | X*1 | X | X | X | X |
| | O | O | O | X | X | O | X | X | O | O | O | O | X*2 | X | O | X | X |
| | O | O | O | O | X | O*3 | O*4 | X | O | O | O | O | BK | X | O | X | X |
| | O | O | O | O | O | O*3 | O*4 | X | O | O | O | O | BK | X | O | X | X |
| NK/BK DK | O | X | X | X | X | X | X | X | X | X | O | O | X*1 | X | X | O | X |
| | O | O | X | X | X | X | X | X | X | X | O | O | X*1 | X | X | O | X |
| | O | O | O | X | X | O | X | X | O | O | O | O | X*2 | X | X | X | X |
| | O | O | O | O | X | O*3 | O*4 | X | O | O | O | O | BK | X | X | X | X |
| | O | O | O | O | O | O*3 | O*4 | X | O | O | O | O | BK | O | X | X | X |
| Tape play: UKW | O | O | O | O | O | / | / | O | X | X | X | X | X*1 | X | X | X | O |
| Tape play: SK/BK | O | O | O | X | X | O*3 | X | O | X | O | O | O | X*2 | X | X | X | O |
| | O | O | O | O | X | O*3 | O*4 | O | X | O | O | O | BK | X | X | X | O |
| | O | O | O | O | O | O*3 | O*4 | O | X | O | O | O | BK | O | X | X | X |



# PARTS LOCATION/ANWEISUNGEN FÜR DER AUSBAU

- Reference numbers, in ( ) are listed in the Replacement Parts List, starting on page 36.
- For other parts location, see the EXPLODED VIEWS, pages 35 & 38.

## TOP VIEW, WITH COVER REMOVED

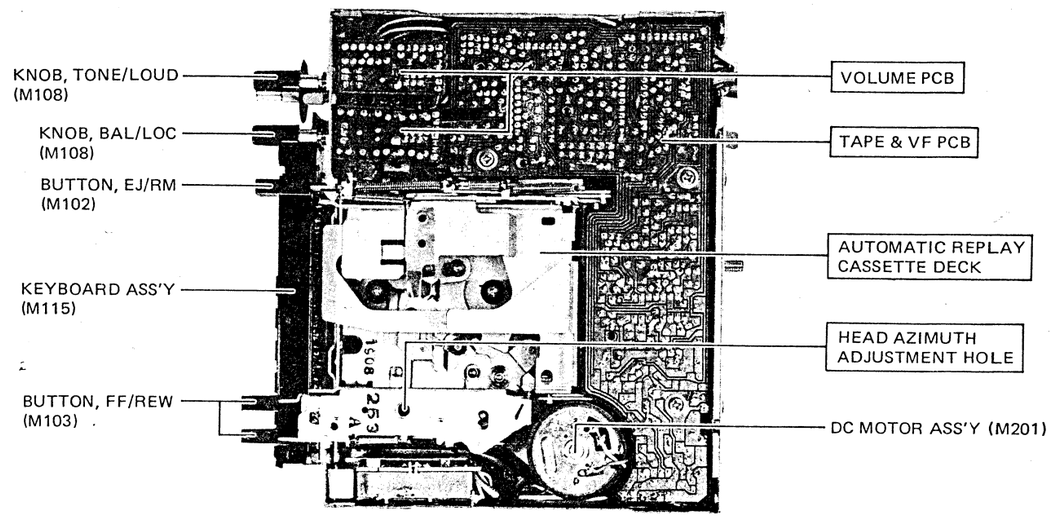


## REAR VIEW AND CONNECTING DIAGRAM

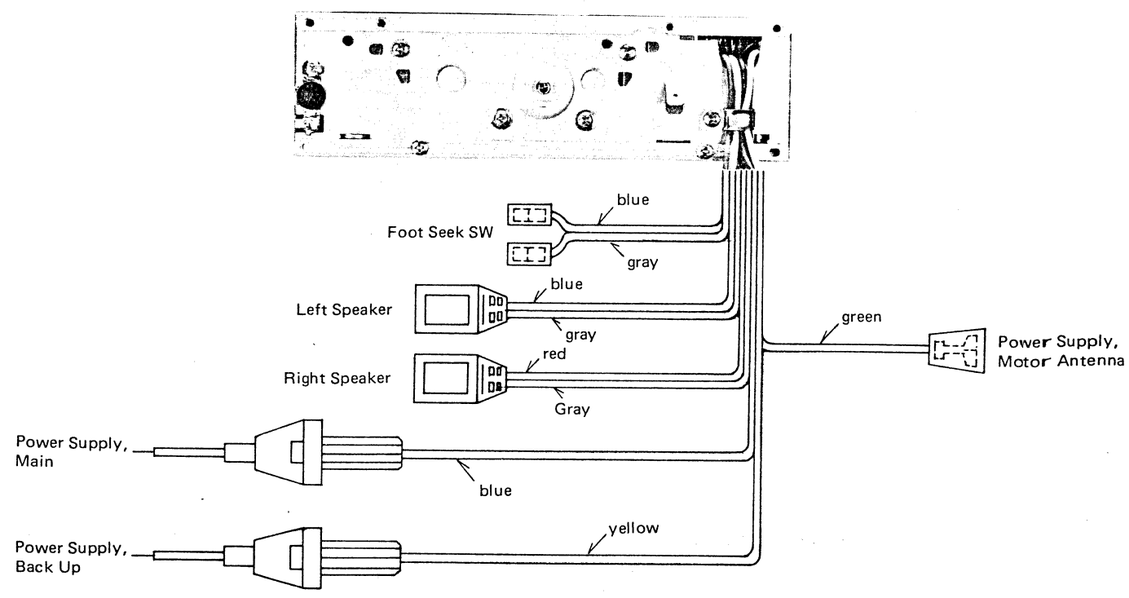

## SERVICING HINT OF KYY BOARD ASS'Y/WARTUNGSCHINWEISE FÜR DAS TASTATUR

### REPLACEMENT OF KEYBOARD ASS'Y

1) To replace the keyboard ass'y, remove the cassette deck and 1 screw mounting the keyboard ass'y.
   Refer to "DISASSEMBLY INSTRUCTIONS, Step 1 to 5", pages 12 & 13 for details.
2) Unsolder the terminals of the keyboard ass'y.

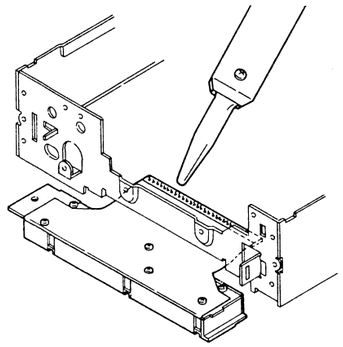

3) Remove the keyboard case from the flexible PCB by 6 screws as follows.

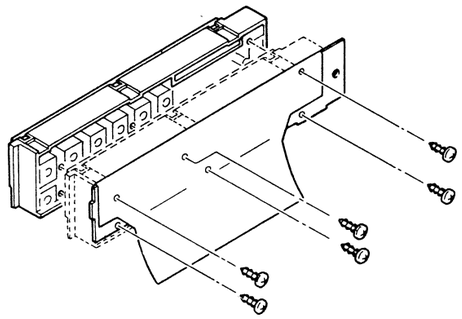

### EXPLODED VIEW OF KEYBOARD ASS'Y

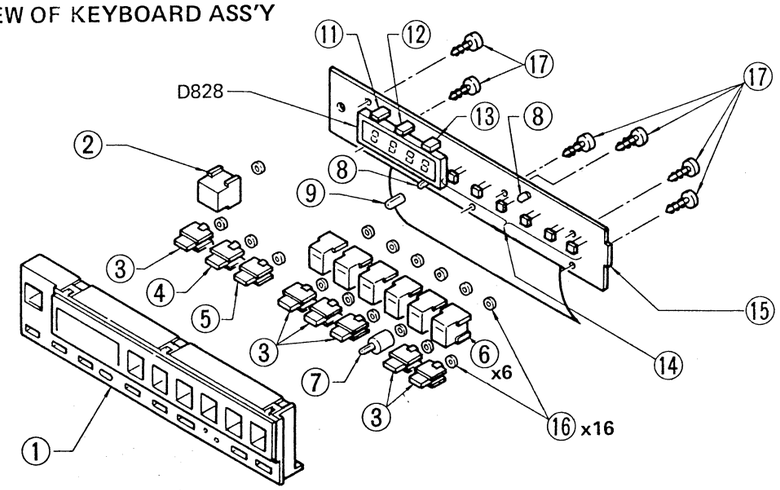


### REPLACEMENT PARTS LIST OF KEYBOARD ASS'Y

| No. | Part No. | Part Name & Description | Q'ty |
|---|---|---|---|
| 1 | YESFX999005 | Housing Ass'y | 1 |
| 2 | YESFE13020 | SEEK Button | 1 |
| 3 | YESFE13021 | DISPLAY Button | 6 |
| 4 | YESFE13022 | DK Button | 1 |
| 5 | YESFE13023 | SK/BK Button | 1 |
| 6 | YESFE13024 | PRESET Button | 6 |
| 7 | YESFE13025 | MEMORY Button | 1 |
| 8 | YESAL012 | Pilot Lamp | 2 |
| 9 | YESFR01003 | Illumination Cap | 1 |

| No. | Part No. | Part Name & Description | Q'ty |
|---|---|---|---|
| 10 | LN543GKHMC | LED, Display (D828) | 1 |
| 11 | YEADPG5531KY | LED Indicator | 1 |
| 12 | YEADPR5531K | LED Indicator | 1 |
| 13 | YEADAA5531K | LED Indicator | 1 |
| 14 | YESAD006 | LED Indicator | 6 |
| 15 | YESAP001 | Flexible PCB | 1 |
| 16 | YESFR01004 | Rubber Chip | 16 |
| 17 | 1.8x5mmSCREW | Screw, Tapping | 6 |



## INSTALLATION INSTRUCTIONS/EINBAU

**Installation Opening**
In-dash installation of the unit can be possibly done if the car's dashboard has an opening for this unit as shown in Fig. 1. If the car's dashboard has no appropriate opening, use the template to make opening for this unit installation. The car's dashboard should have a thickness of not more than 5.5 mm in order to make the installation of the unit be possible.

**Installation Procedures.**
1. Fix the two (2) Front Brackets onto the left and right sides of the unit, as shown in Fig. 2.
2. Loosen the Back-up Metal on the Front Bracket by unscrewing the four (4) screws (two for each side).
3. Before definitely mounting the unit to the car's dashboard, see "To secure the rear of the unit" explained below and check whether the rear of the unit is properly fixed to the Fire Wall of Car. Refer to any one of these figures, Fig. 4 or 5, that best suits stable installation of this unit. Also check the electrical connections by referring to the operating instructions.
   Mount the unit to the car's dashboard as shown in Fig. 2.
4. As shown in Fig. 3, the upper and lower ends of the Back-up Metals (both sides) should be properly braced onto the back of the car's dashboard by tightening the screws. In other words, slide the Back-up Metals upwards and or downwards while tightening the screws.
5. Fix the Trimplate to the unit, as shown in Fig. 3.

**To secure the rear of the unit**

- **Using the Rear Support Strap (See Fig. 4)**
  Fix one end of the Rear Support Strap to the rear of the unit, and the other end to the Fire Wall of Car.
- **Using the Rubber Cushion (See Fig. 5)**
  If there is an existing Rear Support Bracket on the Fire Wall of Car, simply place the Rubber Cushion over the portruding bolt on the rear of the unit. Then mount the rear of the unit to the existing Rear Support Bracket.

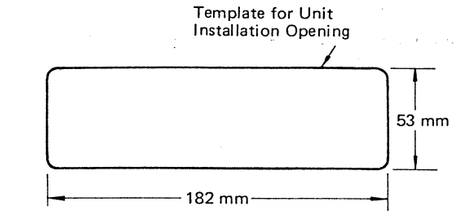


Fig. 1

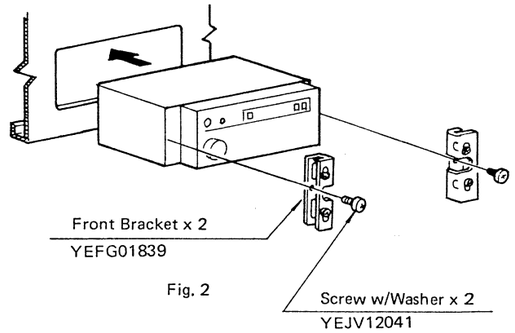


Fig. 2

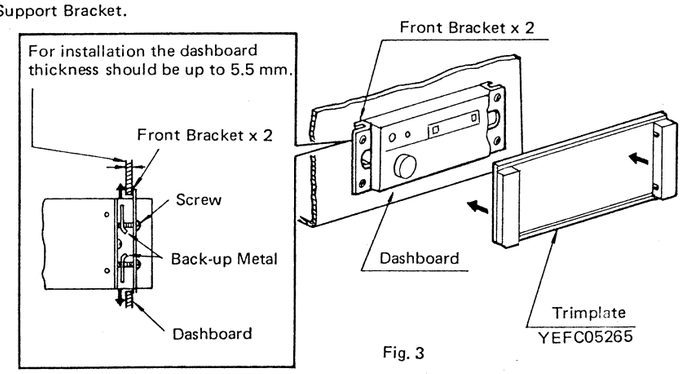


Fig. 3

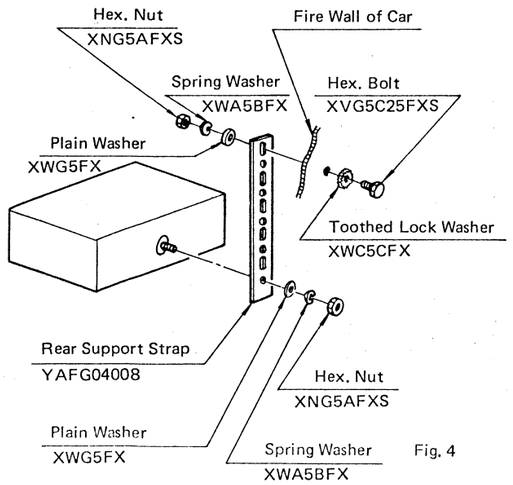


Fig. 4

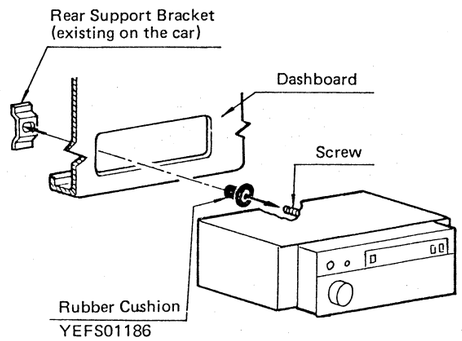


Fig. 5

# DISASSEMBLY INSTRUCTIONS/ANWEISUNGEN FÜR DER AUSBAU

① Remove the knob.
② Remove the escutcheon ass'y by depressing both the nails.

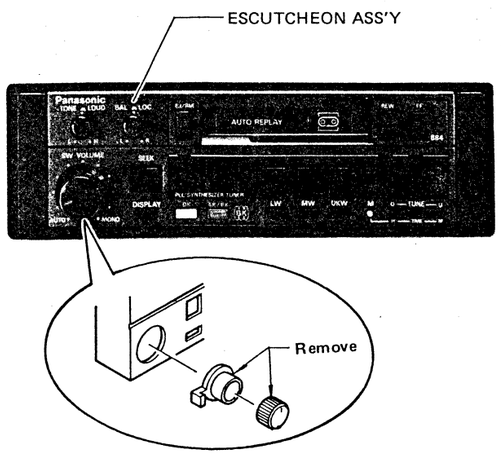


③ Remove the upper and the bottom cover.
(by 2 screws on rear side)

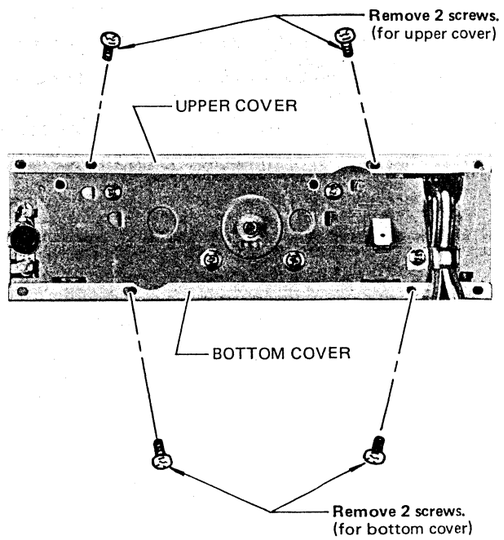


④ Remove the upper cover and the bottom cover.
(by 2 screws/1 screw on front side)

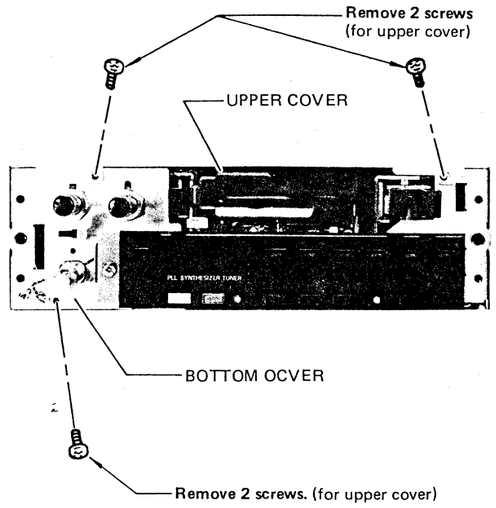


⑤ Open the keyboard ass'y.
(by 1 screw on front side)

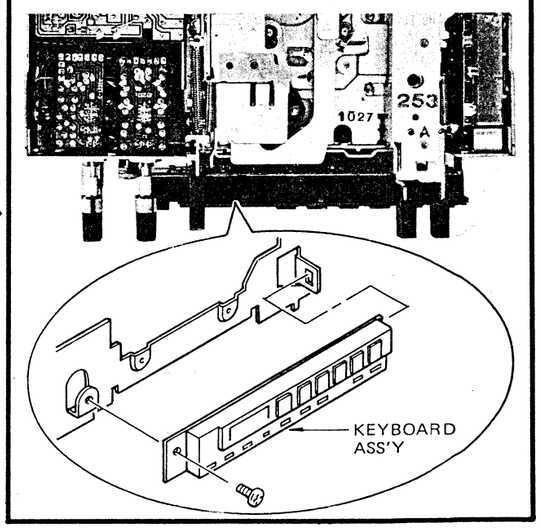


⑥ Remove the bottom cover.
(by 2 screws)

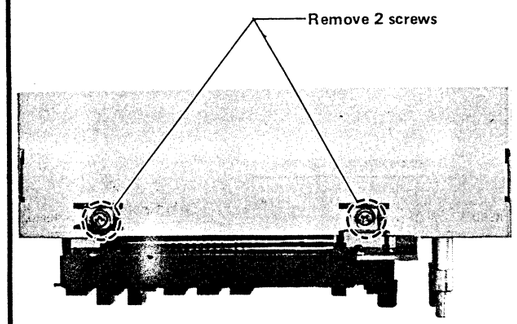


⑦ Remove the FM Front-End and IC802 if necessary.

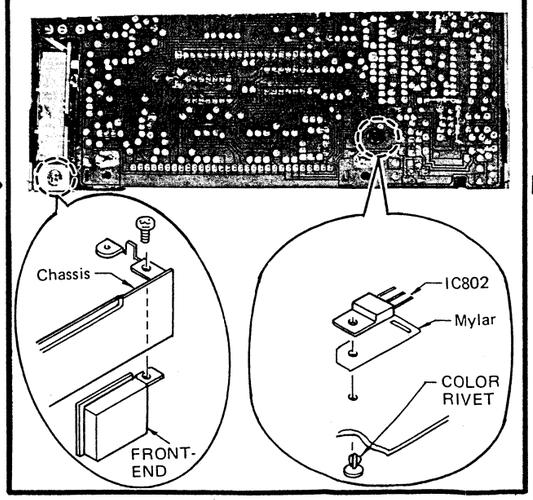


⑧ Remove the cassette deck.
(by 2 screws on rear side)

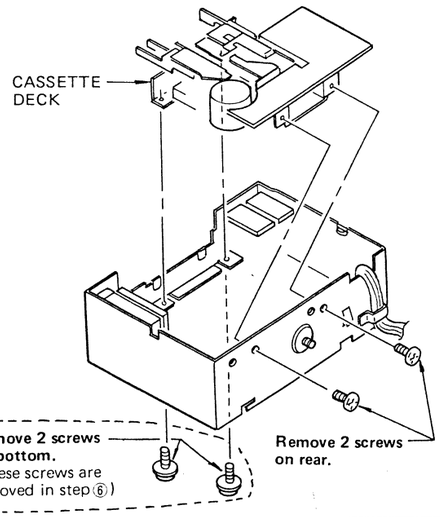


⑨ Open the cassette deck.

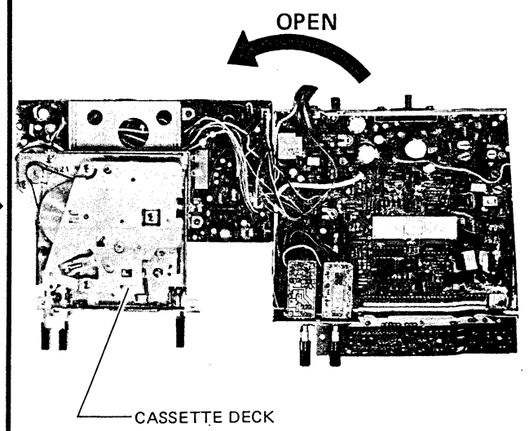

# IC EQUIVALENT CIRCUIT/IC-ERSATZSCHALTBILD

## AN7254 (IC51)

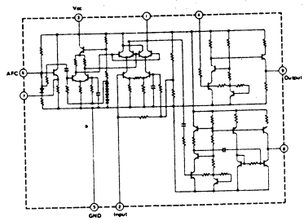

## YEAMLA1130 (IC101)

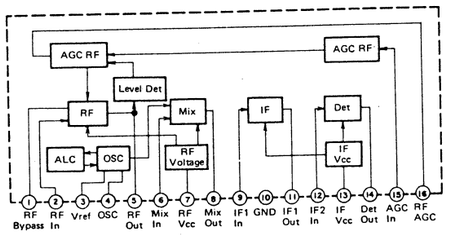


## AN7256 (IC150)

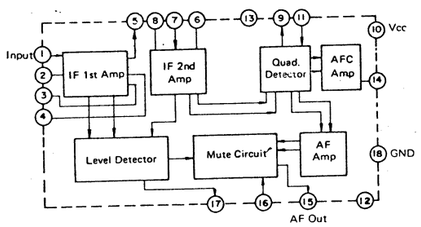


## YEAMLA3161 (IC221)

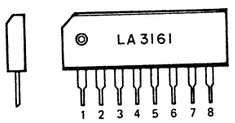


① Input 1
② NFB 1
③ Output 1
④ Vcc
⑤ GND
⑥ Output 2
⑦ NFB 2
⑧ Input 2

## YEAMLA4440 (IC301)

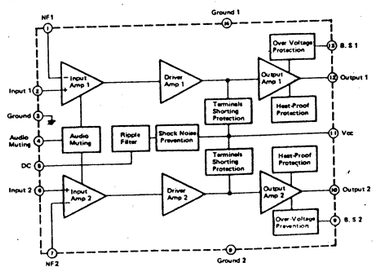

## AN6130N (IC500)

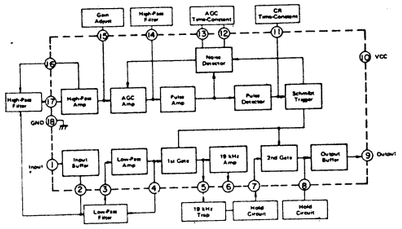

## YEAMBA1350 (IC551)

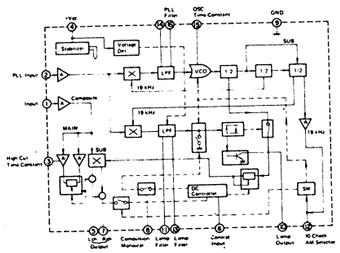

## YEAMHH02S (IC850)

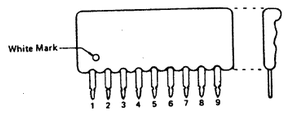


① FM IF In
② Cut Off Control
③ GND
④ 820 kHz Coil In
⑤ 820 kHz Coil Out
⑥ 820 kHz Output
⑦ Power
⑧ Crystal
⑨ GND

## YEAMHH03S (IC851)

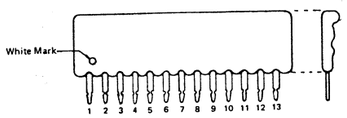


1 AM IF In
2 Cut Off Control
3 SSC
4 GND
5 450 kHz CF In
6 450 kHz CF Out
7 T.P
8 Power
9 Time-Constant
10 VF
11 SK
12 Search Trigger Out
13 GND

## YEAMUPB553 (IC803)

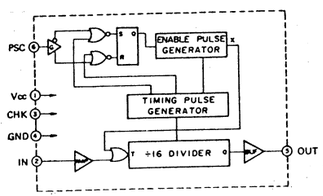




## YEAMPD4053B (IC601)

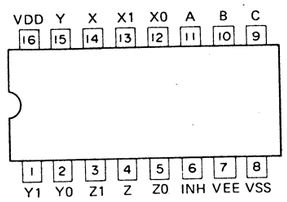


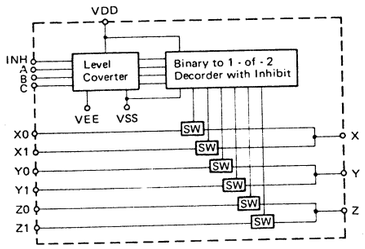


| A | B | C | Switch Mode | | | Output |
|---|---|---|---|---|---|---|
| L | L | L | X0 | Y0 | Z0 | Stereo |
| H | H | L | X1 | Y1 | Z0 | Mono |
| L | L | H | X0 | Y0 | Z1 | Stereo |
| H | H | H | X1 | Y1 | Z1 | no output |

## YEAMNJM4558A (IC615)

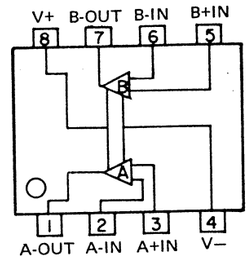


## YEAMLA2200 (IC151)

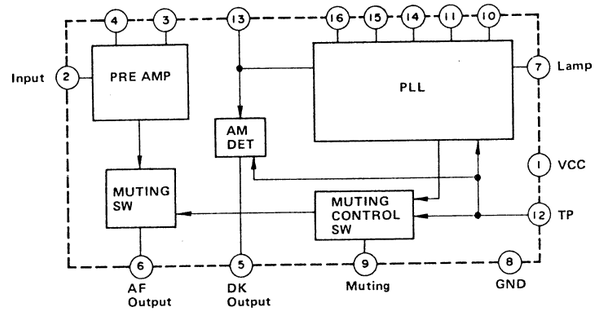


## FUSE REPLACEMENT

Be sure to use a fuse of specified rating (3A, 1A), when replacing a blown fuse.
Fuses rated at higher capacity, use of any substitute, or connection without a fuse may result in a fire hazard or damage to the unit.
If the replacement fuse fails, contact your nearest shop.

CAUTION:

1. Connect the BATTERY LEAD (yellow) direct to the battery. Otherwise, time and memory setting can not bu done.
2. If battery connection is disconnected (such as during battery replacement, recharging the battery, etc.), all electronic settings previously done on this unit would fade out. To reset, follow previous instructions on this Operating Instructions.

## SICHERUNG

Muß die Sicherung erneuert werden, nut Sicherungen mit der gleichen Nenstromstärke (3A, 1A) verwenden: Verwendung von Sicherungen mit höherem Nennwert, oder Ersatzmittel, bzw. Anschluß ohne Sicherung führt zu Feuergefahr oder Baschädigung des Gerätes.
Sollte eine neu eingesetzte Sicherung durchbrennen, wenden Sie sich bitte and Ihren Fachhändler.

ANMERKUNG:

1. Das gelbe BATTERIEKABELS direkt an die Batterie anschließen, da sonst Uhrzeit und Speicher nicht eingeste-llt werden können.
2. Wenn der Batterieanschluß abgetrennt wird (z.B. beim Auswechseln der Batterie,. Aufladen der Batterie usw.) werden alle elektronischen Einstellungen gelöscht In einem solchen Fall gemäß Anleitungen in diesser Bedie-nungsanleitung die Einstellungen nochmals durchführen.

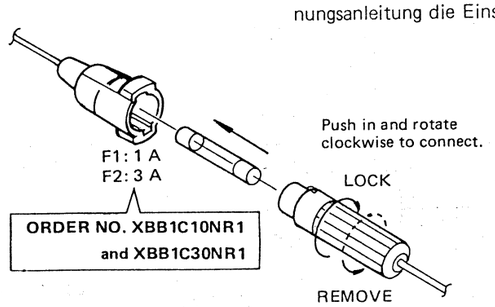


Push in and rotate counterclockwise to disconnect.

# CQ-884EG CQ-884EG

## BLOCK DIAGRAM/BLOCK-SCHALTBILD

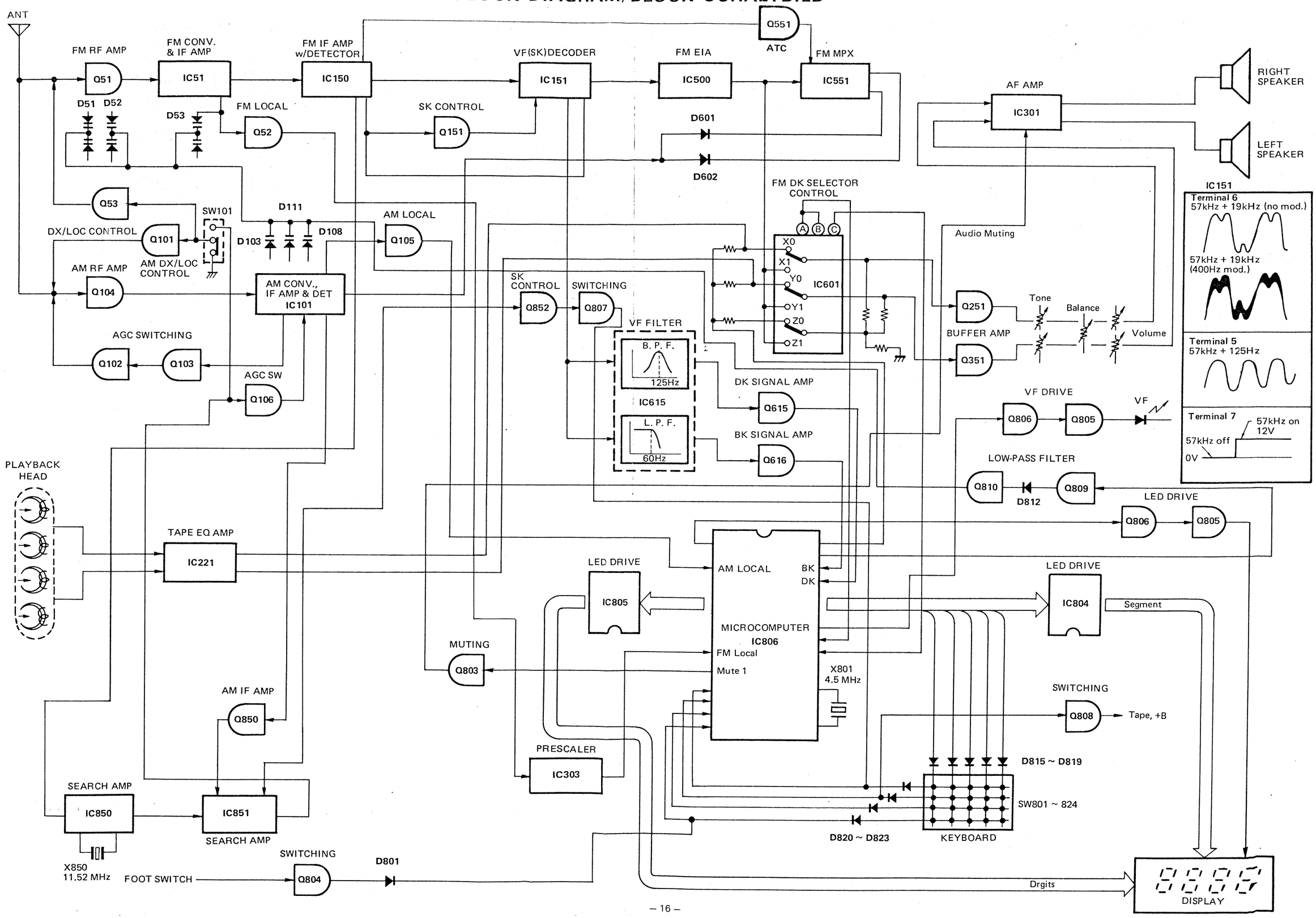

# SCHEMATIC DIAGRAM/SCHALTBILT MODEL CQ-884EG(TUNER CONTROL BLOCK)

This schematic diagram is traced by a computerized tracing machine.

DISPLAY OUTPUT CHART

88:8.8s

| SEG / DIG | Sa | Sb | Sc | Sd | Se | Sf | Sg | S-n (PD-3) |
|---|---|---|---|---|---|---|---|---|
| D1 | a1 | b1 | c1 | d1 | e1 | f1 | g1 | 5 |
| D2 | a2 | b2 | c2 | d2 | e2 | f2 | g2 | |
| D3 | a3 | b3 | c3 | d3 | e3 | f3 | g3 | |
| D4 | a4 | b4 | c4 | d4 | e4 | f4 | g4 | MW |
| D5 | LW | MW | UKW | ARI | DK | SK | – | – |
| D6 | M1 | M2 | M3 | M4 | M5 | M6 | – | SK |

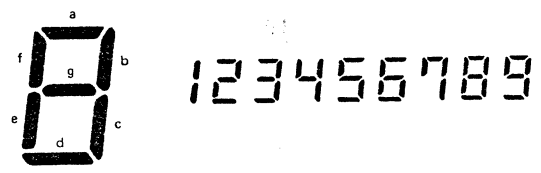


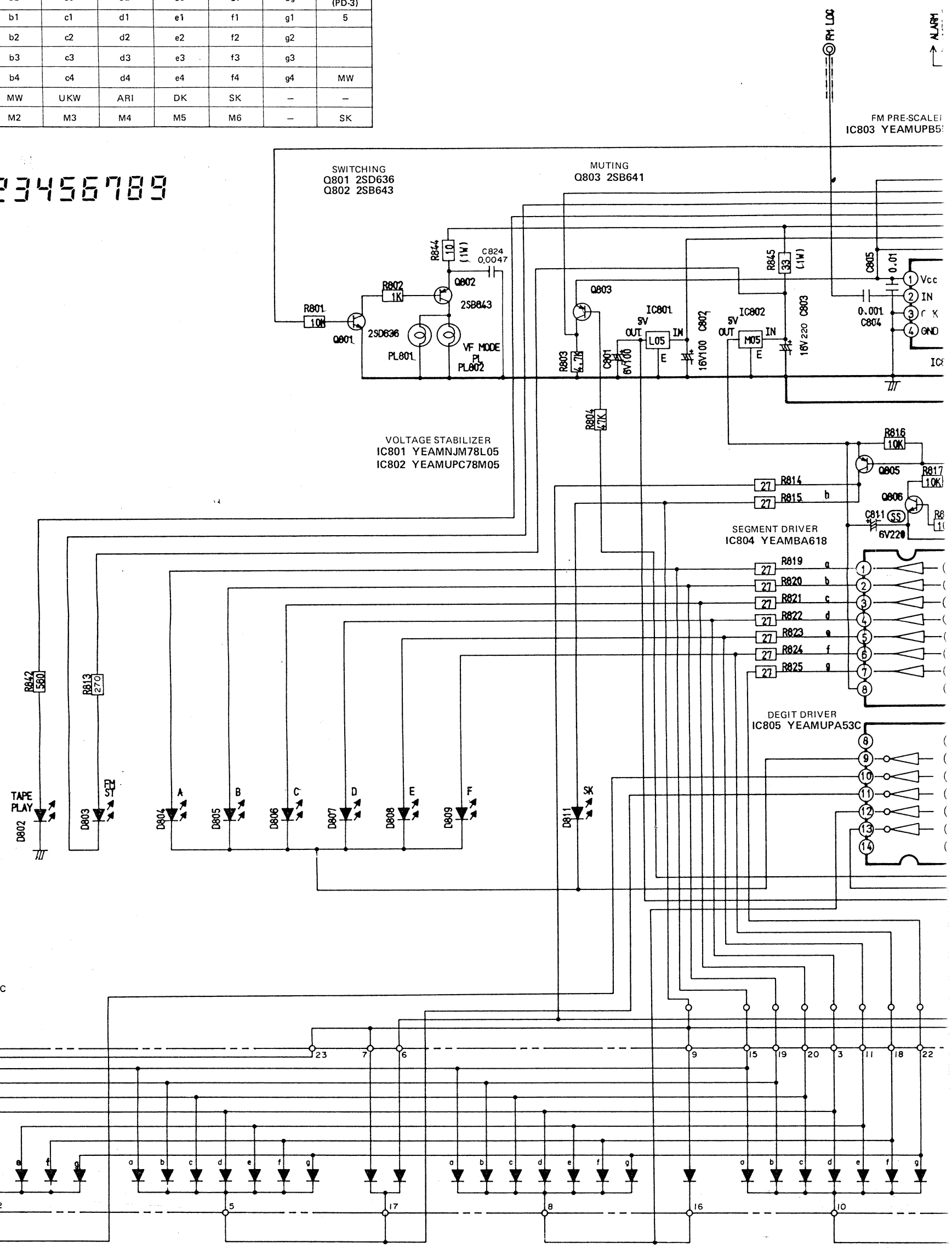




Feb., 1982

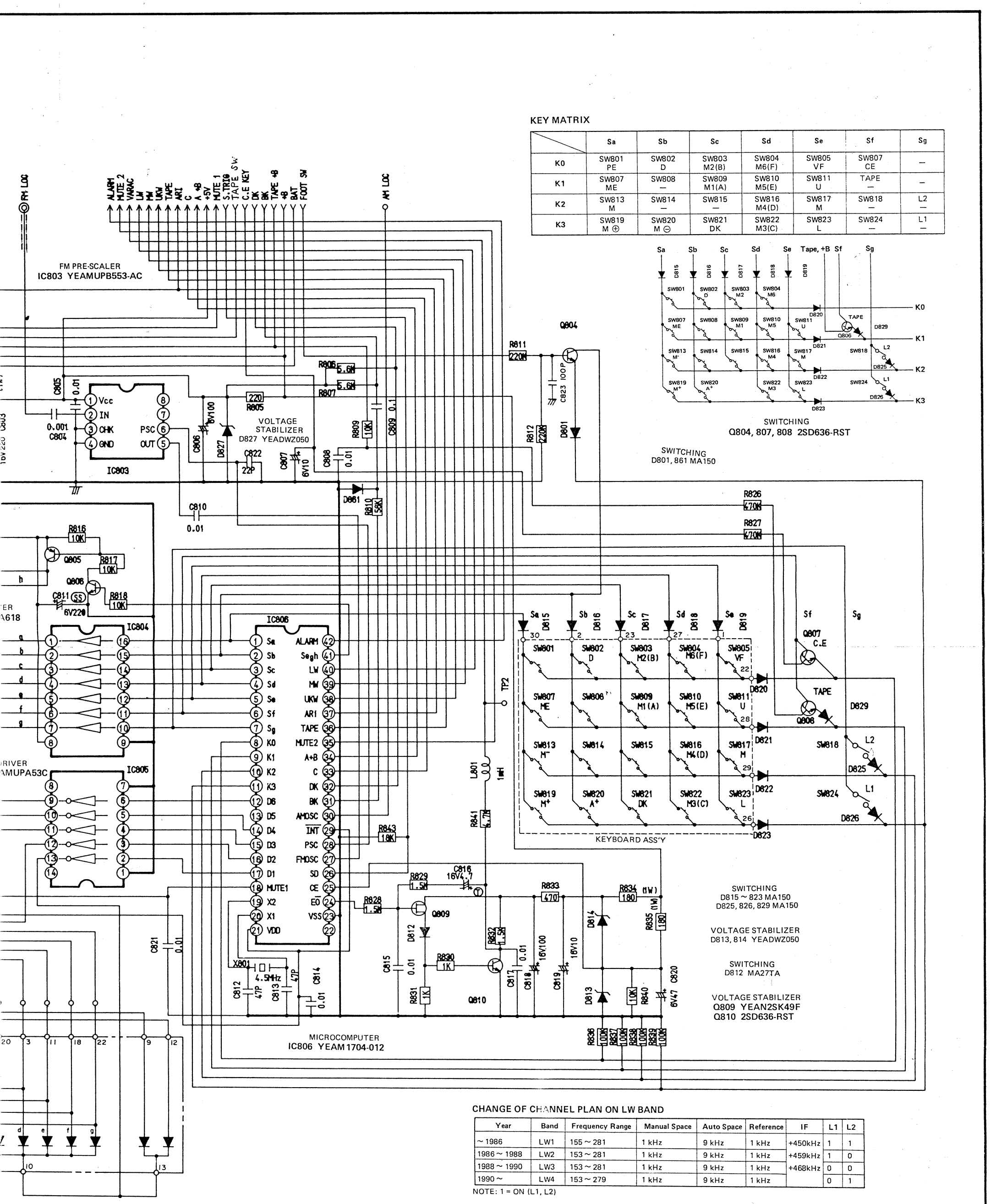


KEY MATRIX

| | Sa | Sb | Sc | Sd | Se | Sf | Sg |
|---|---|---|---|---|---|---|---|
| K0 | SW801 PE | SW802 D | SW803 M2(B) | SW804 M6(F) | SW805 VF | SW807 CE | — |
| K1 | SW807 ME | SW808 — | SW809 M1(A) | SW810 M5(E) | SW811 U | TAPE — | — |
| K2 | SW813 M | SW814 — | SW815 — | SW816 M4(D) | SW817 M | SW818 — | L2 — |
| K3 | SW819 M ⊕ | SW820 M ⊖ | SW821 DK | SW822 M3(C) | SW823 L | SW824 — | L1 — |

CHANGE OF CHANNEL PLAN ON LW BAND

| Year | Band | Frequency Range | Manual Space | Auto Space | Reference | IF | L1 | L2 |
|---|---|---|---|---|---|---|---|---|
| ~ 1986 | LW1 | 155 ~ 281 | 1 kHz | 9 kHz | 1 kHz | +450kHz | 1 | 1 |
| 1986 ~ 1988 | LW2 | 153 ~ 281 | 1 kHz | 9 kHz | 1 kHz | +459kHz | 1 | 0 |
| 1988 ~ 1990 | LW3 | 153 ~ 281 | 1 kHz | 9 kHz | 1 kHz | +468kHz | 0 | 0 |
| 1990 ~ | LW4 | 153 ~ 279 | 1 kHz | 9 kHz | 1 kHz | | 0 | 1 |

NOTE: 1 = ON (L1, L2)

# SCHEMATIC DIAGRAM/SCHALTBILT MODEL CQ-884EG(TAPE & RADIO BLOCK)

This schematic diagram is traced by a computerized tracing machine.

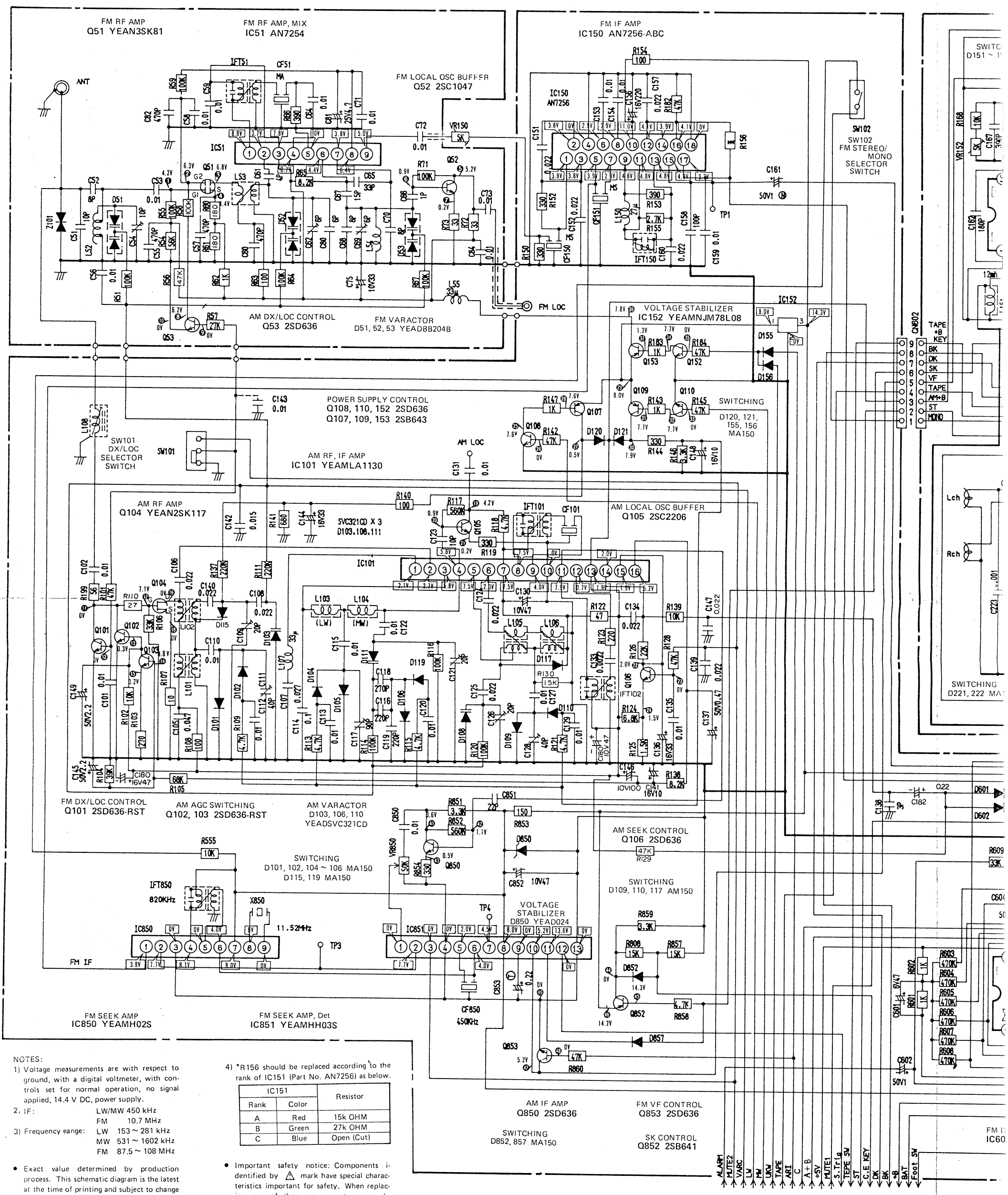


NOTES:

1) Voltage measurements are with respect to ground, with a digital voltmeter, with controls set for normal operation, no signal applied, 14.4 V DC, power supply.

2, IF: LW/MW 450 kHz
FM 10.7 MHz

3) Frequency eange: LW 153 ~ 281 kHz
MW 531 ~ 1602 kHz
FM 87.5 ~ 108 MHz

- Exact value determined by production process. This schematic diagram is the latest at the time of printing and subject to change without notice. Replace same value as original parts.

4) *R156 should be replaced according to the rank of IC151 (Part No. AN7256) as below.

| IC151 | | Resistor |
|---|---|---|
| Rank | Color | |
| A | Red | 15k OHM |
| B | Green | 27k OHM |
| C | Blue | Open (Cut) |

- Important safety notice: Components identified by ⚠ mark have special characteristics important for safety. When replacing any of these components, use only manufacturer's specified parts.

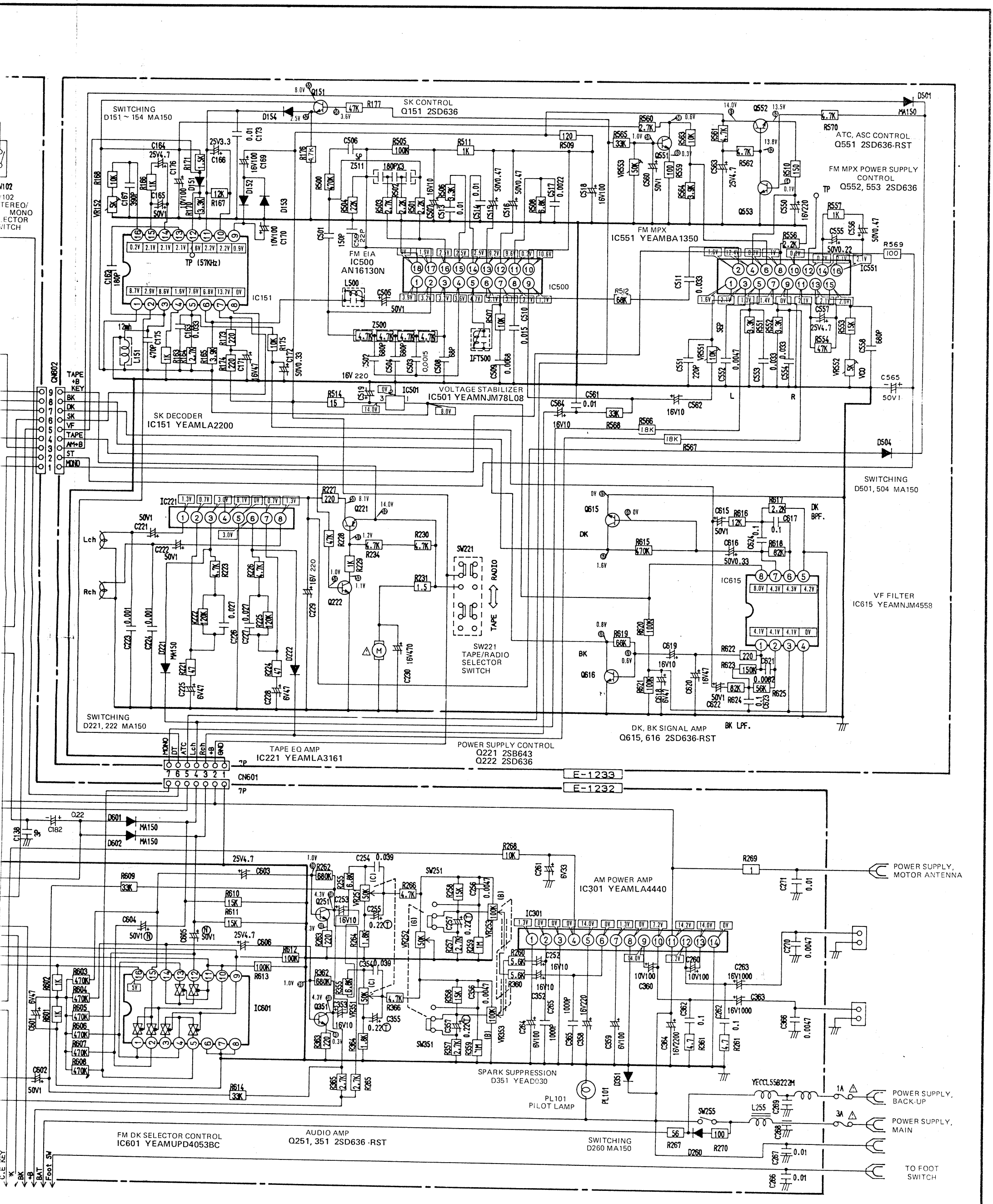


# CASSETTE CAR STEREO w/LW/MW/FM/FM MPX ELECTRONIC TUNER RADIO

# WIRING DIAGRAM/VERDRAHTUNG MODEL CQ-884EG (TUNER CONTROL & RADIO BLOCK)

This circuit board is used a computerized pattern.

WIRE COLOR CODE

| | | | |
|---|---|---|---|
| BLK | Black | ORG | Orange |
| BLU | Blue | RED | Red |
| BRN | Brown | VLT | Violet |
| GRN | Green | WHT | White |
| GRY | Gray | YEL | Yellow |

POWER SUPPLY, MAIN

■ Negative side is shown in blue.

| NO. | VOLTAGE | NO. | VOLTAGE | NO. | VOLTAGE | PIN NO. | VOLTAGE | PIN NO. | VOLTAGE | PIN NO. | VOLTAGE |
|---|---|---|---|---|---|---|---|---|---|---|---|
| ① | 4.2V | ㉕ | 7.6V | ㊶ | 0V | ⑫ | 0.7V | IC152 | | ⑤ | 0V |
| ② | 6.3V | ㉖ | 0V | PIN NO. | VOLTAGE | ⑬ | 7.9V | ① | 14.3V | ⑥ | 4.0V |
| ③ | 6.8V | ㉗ | 0.5V | IC51 | | ⑭ | 2.0V | ② | 0V | ⑦ | 8.0V |
| ④ | 4.4V | ㉘ | 7.6V | ① | 8.8V | ⑮ | 1.9V | ③ | 8.0V | ⑧ | 0V |
| ⑤ | 5.2V | ㉙ | 8.0V | ② | 3.7V | ⑯ | 5.2V | IC301 | | ⑨ | 0V |
| ⑥ | 0.9V | ㉚ | 7.9V | ③ | 7.6V | IC150 | | ① | 1.3V | IC851 | |
| ⑦ | 0.2V | ㉛ | 7.7V | ④ | 0.7V | ① | 3.8V | ② | 0V | ① | 0V |
| ⑧ | 6.2V | ㉜ | 7.7V | ⑤ | 0V | ② | 3.8V | ③ | 0V | ② | 7.7V |
| ⑨ | 0V | ㉝ | 0V | ⑥ | 4.4V | ③ | 3.8V | ④ | 0V | ③ | 0V |
| ⑩ | 0V | ㉞ | 7.7V | ⑦ | 3.8V | ④ | 0V | ⑤ | 14.0V | ④ | 0V |
| ⑪ | 0V | ㉟ | 0V | ⑧ | 6.4V | ⑤ | 3.9V | ⑥ | 0V | ⑤ | 2.0V |
| ⑫ | 0V | ㊱ | 7.8V | ⑨ | 5.0V | ⑥ | 2.9V | ⑦ | 1.3V | ⑥ | 4.0V |
| ⑬ | 0.3V | ㊲ | 1.3V | IC101 | | ⑦ | 2.9V | ⑧ | 0V | ⑦ | 4.5V |
| ⑭ | 0.6V | ㊳ | 4.3V | ① | 2.1V | ⑧ | 2.9V | ⑨ | 14.0V | ⑧ | 8.0V |
| ⑮ | 0.2V | ㊴ | 1.0V | ② | 2.7V | ⑨ | 4.8V | ⑩ | 7.2V | ⑨ | 0V |
| ⑯ | 0V | ㊵ | 0.3V | ③ | 5.8V | ⑩ | 11.0V | ⑪ | 14.2V | ⑩ | 5.2V |
| ⑰ | 7.1V | ㊶ | 3.6V | ④ | 5.8V | ⑪ | 4.8V | ⑫ | 7.2V | ⑪ | 13.6V |
| ⑱ | 0V | ㊷ | 1.1V | ⑤ | 7.5V | ⑫ | 4.1V | ⑬ | 14.0V | ⑫ | 0V |
| ⑲ | 4.2V | ㊸ | 0V | ⑥ | 2.0V | ⑬ | 4.8V | ⑭ | 0V | ⑬ | 0V |
| ⑳ | 0.9V | ㊹ | 0V | ⑦ | 7.5V | ⑭ | 3.9V | IC850 | | | |
| ㉑ | 0.2V | ㊺ | 14.3V | ⑧ | 7.5V | ⑮ | 4.9V | ① | 3.8V | | |
| ㉒ | 2.0V | ㊻ | 14.2V | ⑨ | 4.0V | ⑯ | 4.1V | ② | 7.7V | | |
| ㉓ | 0V | ㊼ | 5.2V | ⑩ | 0V | ⑰ | 3.3V | ③ | 0V | | |
| ㉔ | 1.5V | ㊽ | 0V | ⑪ | 7.9V | ⑱ | 0V | ④ | 8.1V | | |

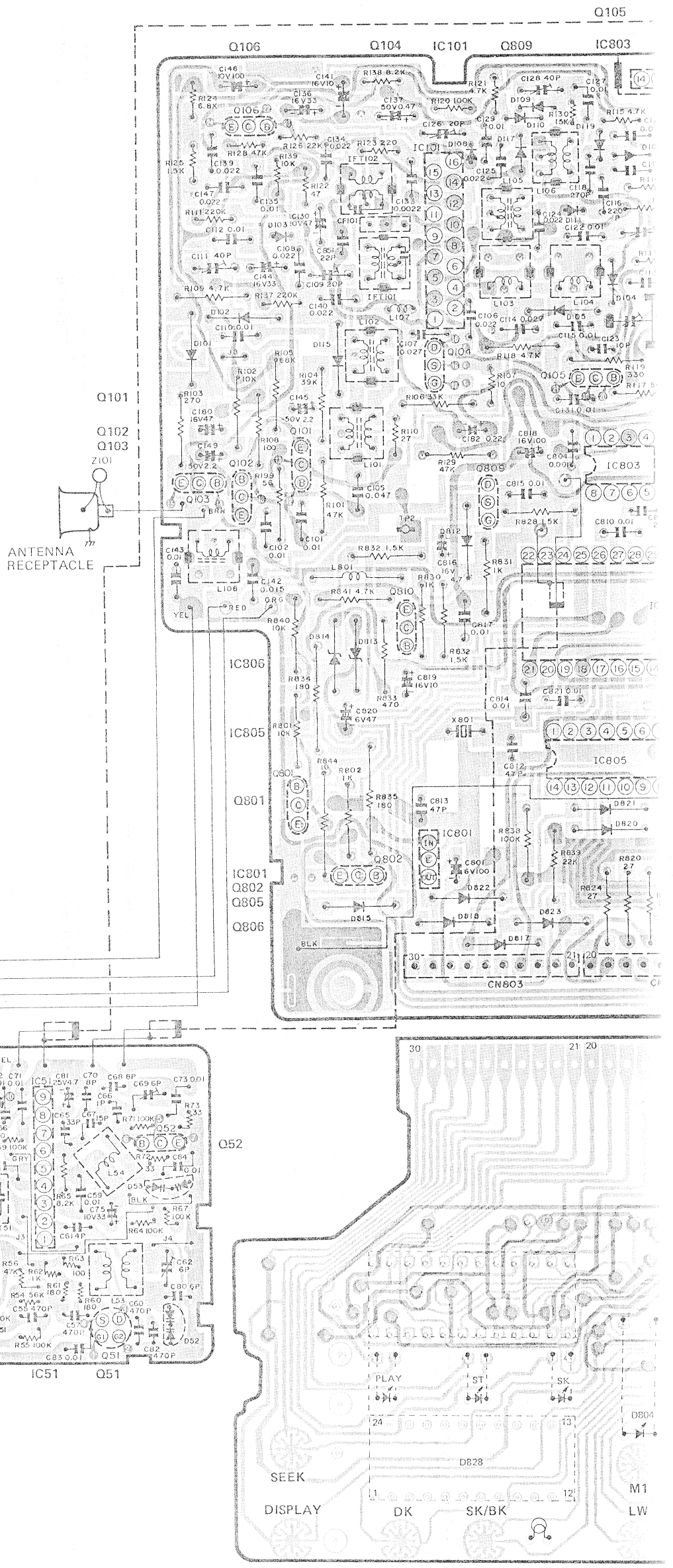


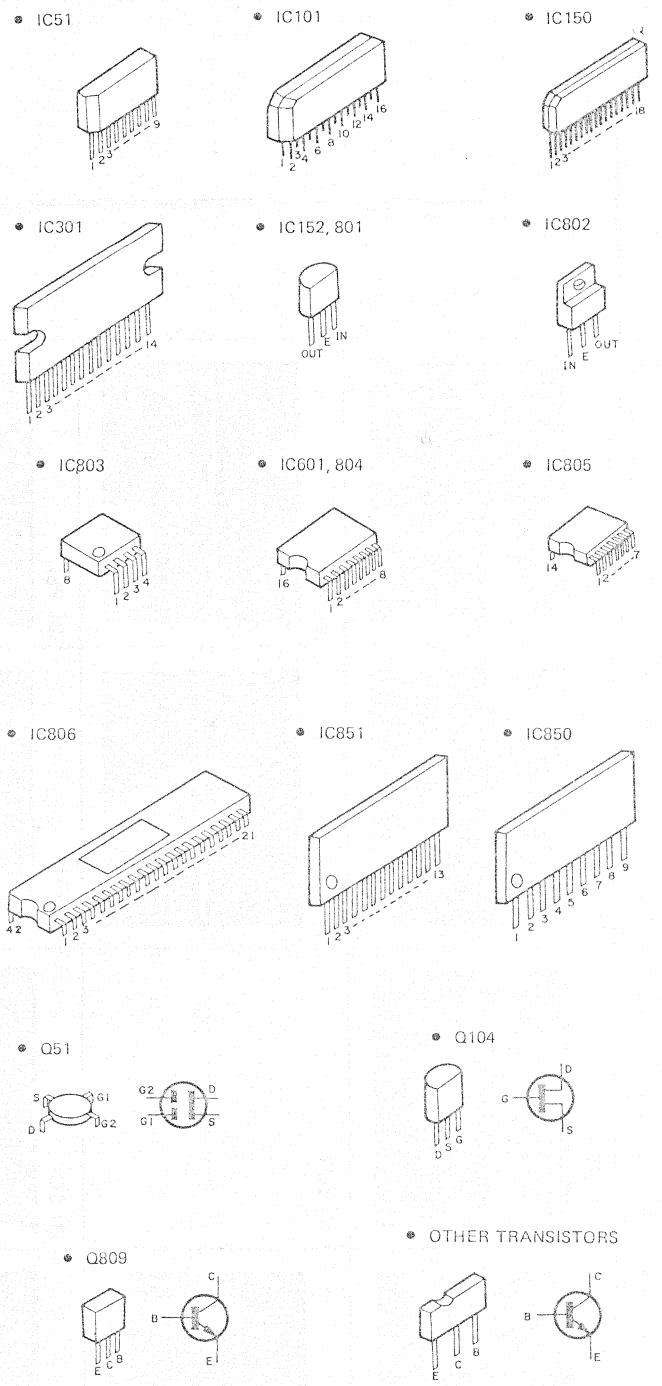




Feb., 1982

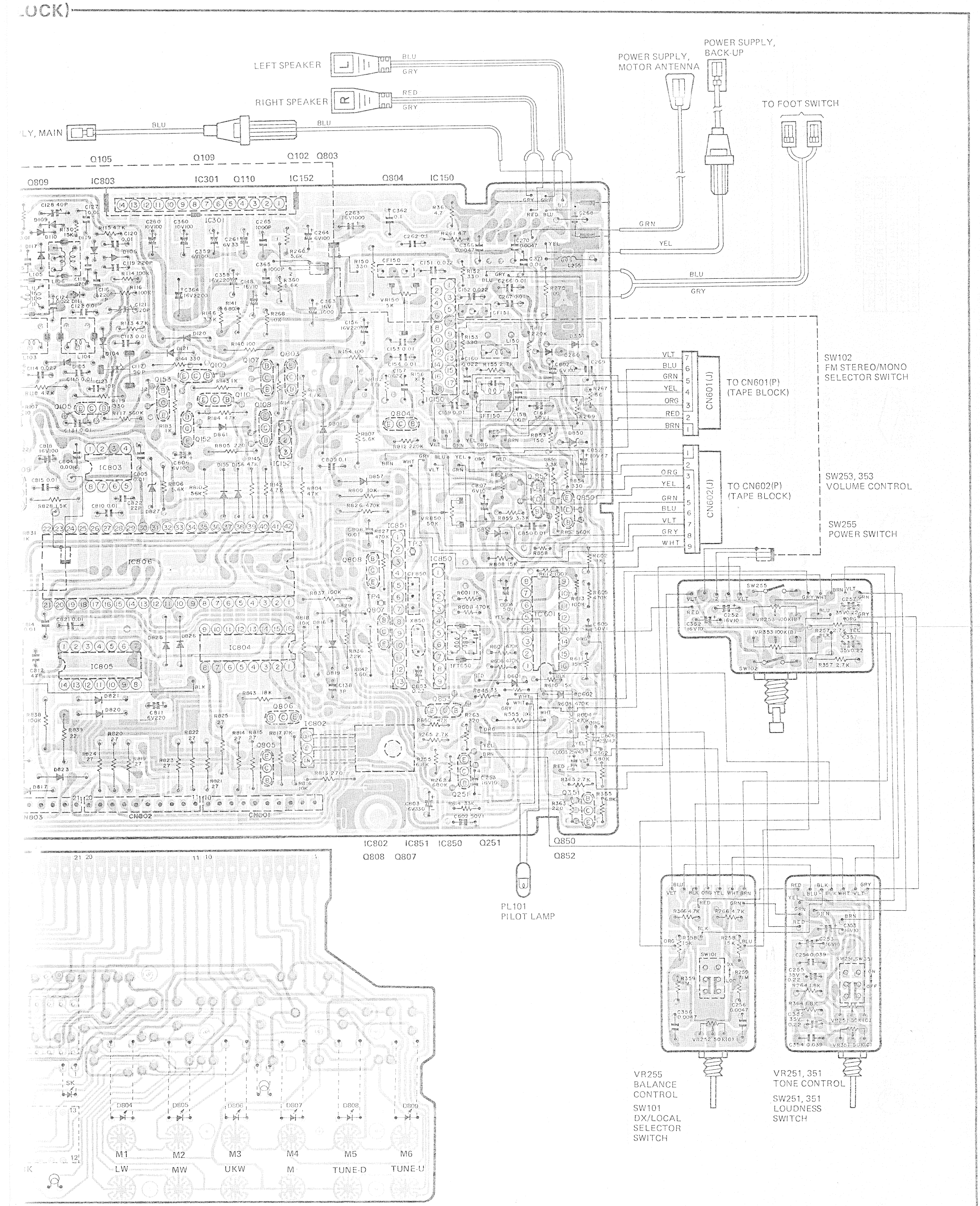
LEFT SPEAKER
RIGHT SPEAKER
POWER SUPPLY, MOTOR ANTENNA
POWER SUPPLY, BACK-UP
TO FOOT SWITCH
TO CN601(P) (TAPE BLOCK)
TO CN602(P) (TAPE BLOCK)
SW102 FM STEREO/MONO SELECTOR SWITCH
SW253, 353 VOLUME CONTROL
SW255 POWER SWITCH
VR255 BALANCE CONTROL
SW101 DX/LOCAL SELECTOR SWITCH
VR251, 351 TONE CONTROL
SW251, 351 LOUDNESS SWITCH
PL101 PILOT LAMP
M1 LW
M2 MW
M3 UKW
M4 M
M5 TUNE-D
M6 TUNE-U

# WIRING DIAGRAM MODEL CQ-884EG(TAPE & VF BLOCK)

This circuit board is used a computerized pattern.

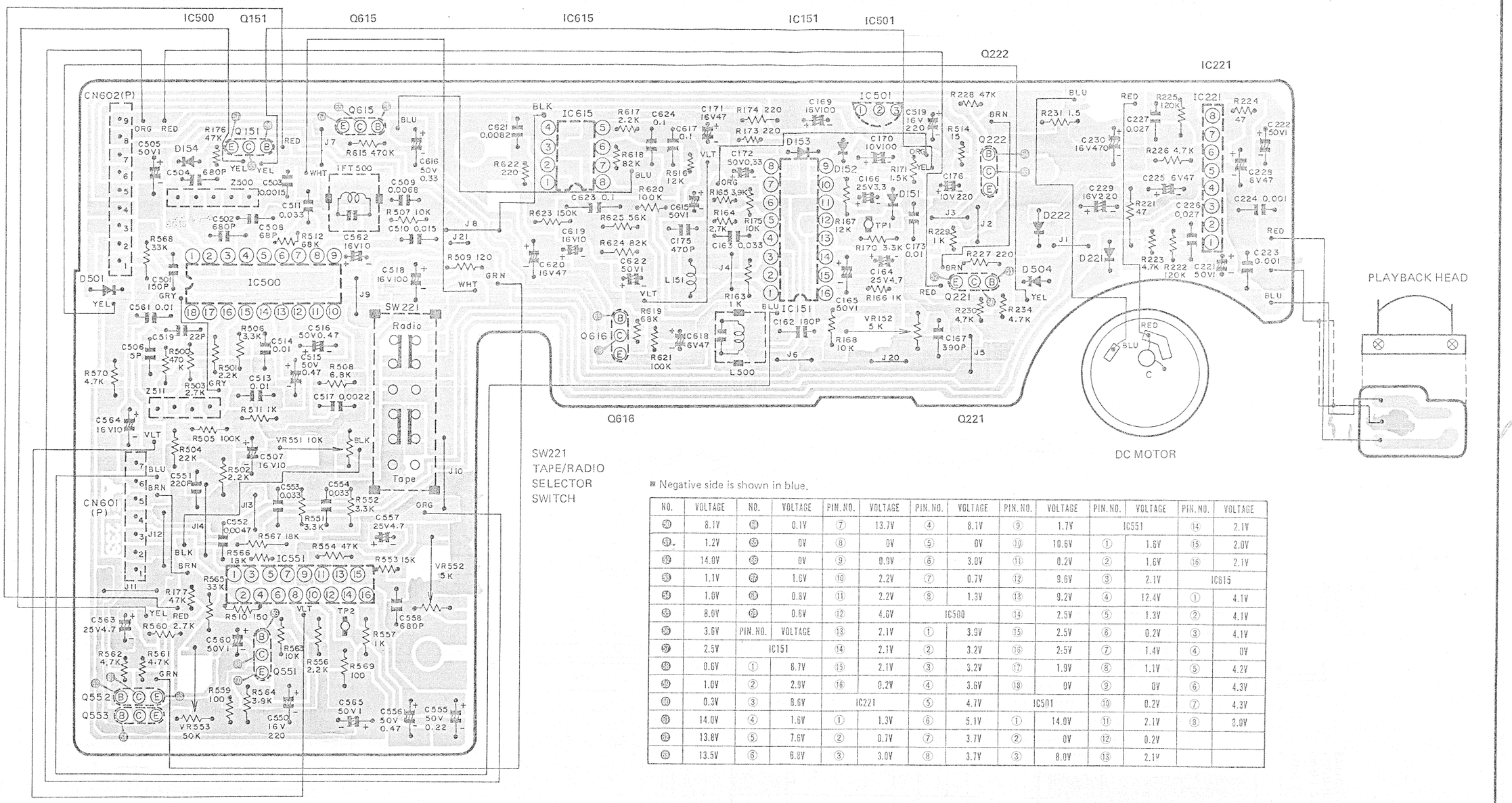


■ Negative side is shown in blue.

| NO. | VOLTAGE | NO. | VOLTAGE | PIN.NO. | VOLTAGE | PIN.NO. | VOLTAGE | PIN.NO. | VOLTAGE | PIN.NO. | VOLTAGE | PIN.NO. | VOLTAGE |
|---|---|---|---|---|---|---|---|---|---|---|---|---|---|
| ㊿ | 8.1V | ㊻ | 0.1V | ⑦ | 13.7V | ④ | 8.1V | ⑨ | 1.7V | IC551 | | ⑭ | 2.1V |
| ㊿ | 1.2V | ㊻ | 0V | ⑧ | 0V | ⑤ | 0V | ⑩ | 10.6V | ① | 1.6V | ⑮ | 2.0V |
| ㊿ | 14.0V | ㊻ | 0V | ⑨ | 0.9V | ⑥ | 3.0V | ⑪ | 0.2V | ② | 1.6V | ⑯ | 2.1V |
| ㊿ | 1.1V | ㊼ | 1.6V | ⑩ | 2.2V | ⑦ | 0.7V | ⑫ | 9.6V | ③ | 2.1V | IC615 | |
| ㊿ | 1.0V | ㊽ | 0.8V | ⑪ | 2.2V | ⑧ | 1.3V | ⑬ | 9.2V | ④ | 12.4V | ① | 4.1V |
| ㊿ | 8.0V | ㊾ | 0.6V | ⑫ | 4.6V | IC500 | | ⑭ | 2.5V | ⑤ | 1.3V | ② | 4.1V |
| ㊿ | 3.6V | PIN.NO. | VOLTAGE | ⑬ | 2.1V | ① | 3.9V | ⑮ | 2.5V | ⑥ | 0.2V | ③ | 4.1V |
| ㊿ | 2.5V | IC151 | | ⑭ | 2.1V | ② | 3.2V | ⑯ | 2.5V | ⑦ | 1.4V | ④ | 0V |
| ㊿ | 0.6V | ① | 8.7V | ⑮ | 2.1V | ③ | 3.2V | ⑰ | 1.9V | ⑧ | 1.1V | ⑤ | 4.2V |
| ㊿ | 1.0V | ② | 2.9V | ⑯ | 0.2V | ④ | 3.6V | ⑱ | 0V | ⑨ | 0V | ⑥ | 4.3V |
| ㊿ | 0.3V | ③ | 8.6V | IC221 | | ⑤ | 4.7V | IC501 | | ⑩ | 0.2V | ⑦ | 4.3V |
| ㊿ | 14.0V | ④ | 1.6V | ① | 1.3V | ⑥ | 5.1V | ① | 14.0V | ⑪ | 2.1V | ⑧ | 8.0V |
| ㊿ | 13.8V | ⑤ | 7.6V | ② | 0.7V | ⑦ | 3.7V | ② | 0V | ⑫ | 0.2V | | |
| ㊿ | 13.5V | ⑥ | 6.8V | ③ | 3.0V | ⑧ | 3.7V | ③ | 8.0V | ⑬ | 2.1V | | |

WIRE COLOR CODE

| | | | |
|---|---|---|---|
| BLK | Black | ORG | Orange |
| BLU | Blue | RED | Red |
| BRN | Brown | VLT | Violet |
| GRN | Green | WHT | White |
| GRY | Gray | YEL | Yellow |

■ IC's AND TRANSISTORS

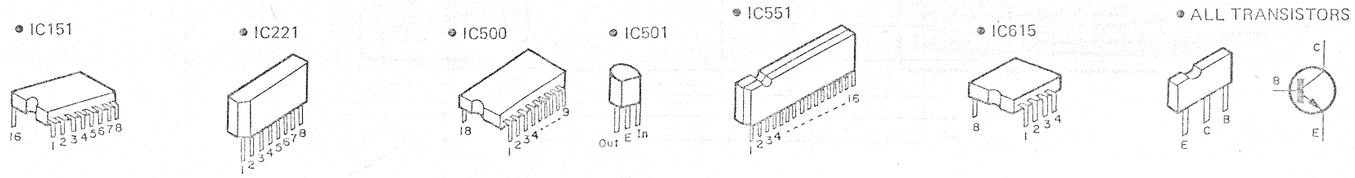




CASSETTE CAR STEREO w/LW/MW/FM/FM MPX ELECTRONIC TUNER RADIO

CQ-884EG CQ-884EG

WAVEFORM OF MICROCOMPUTER/WELL ENFORN DES MIKROCOMPUTERS

CQ-884EG CQ-884EG

## WAVEFORM OF MICROCOMPUTER/WELLENFORN DES MIKROCOMPUTERS

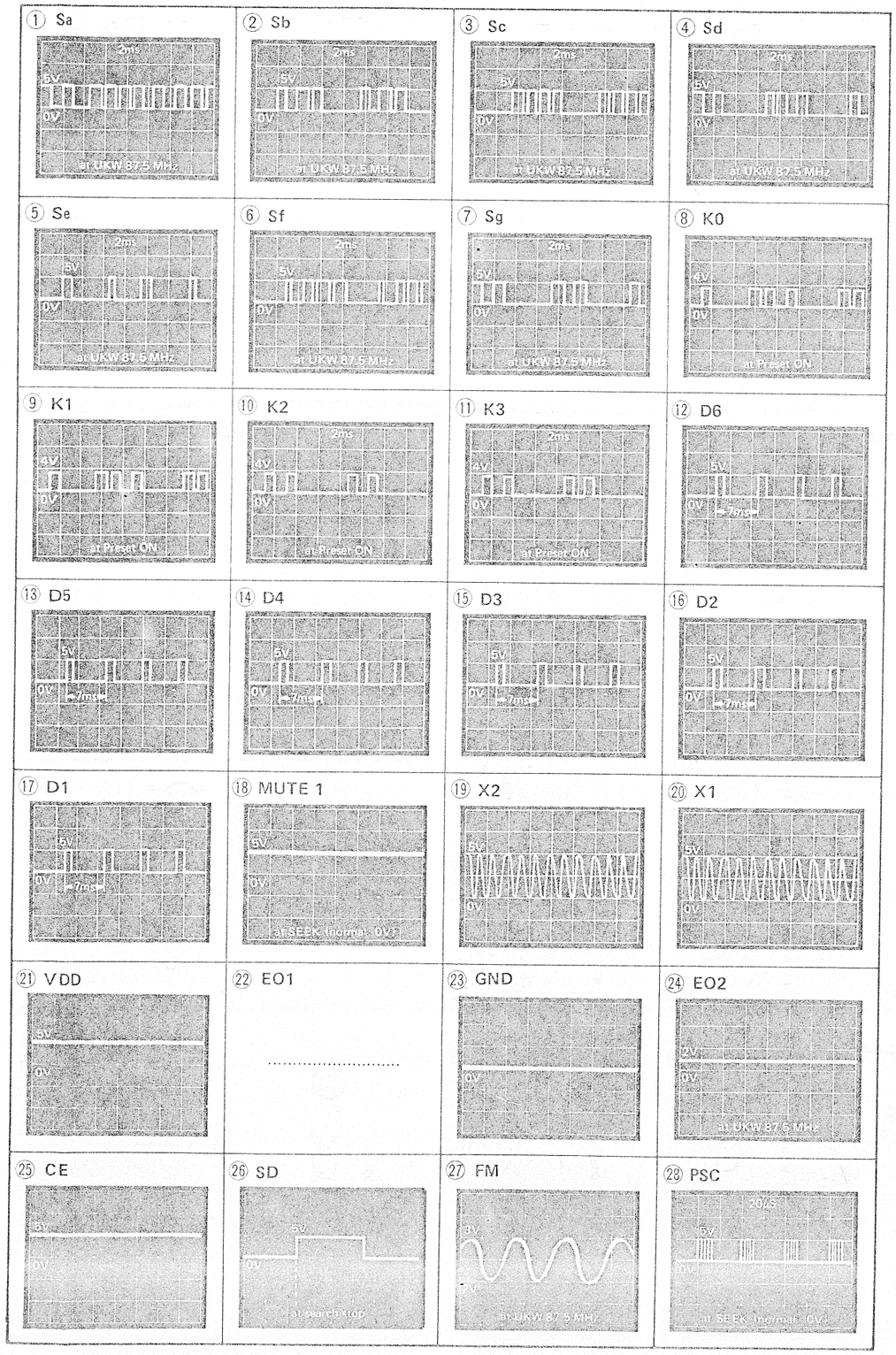


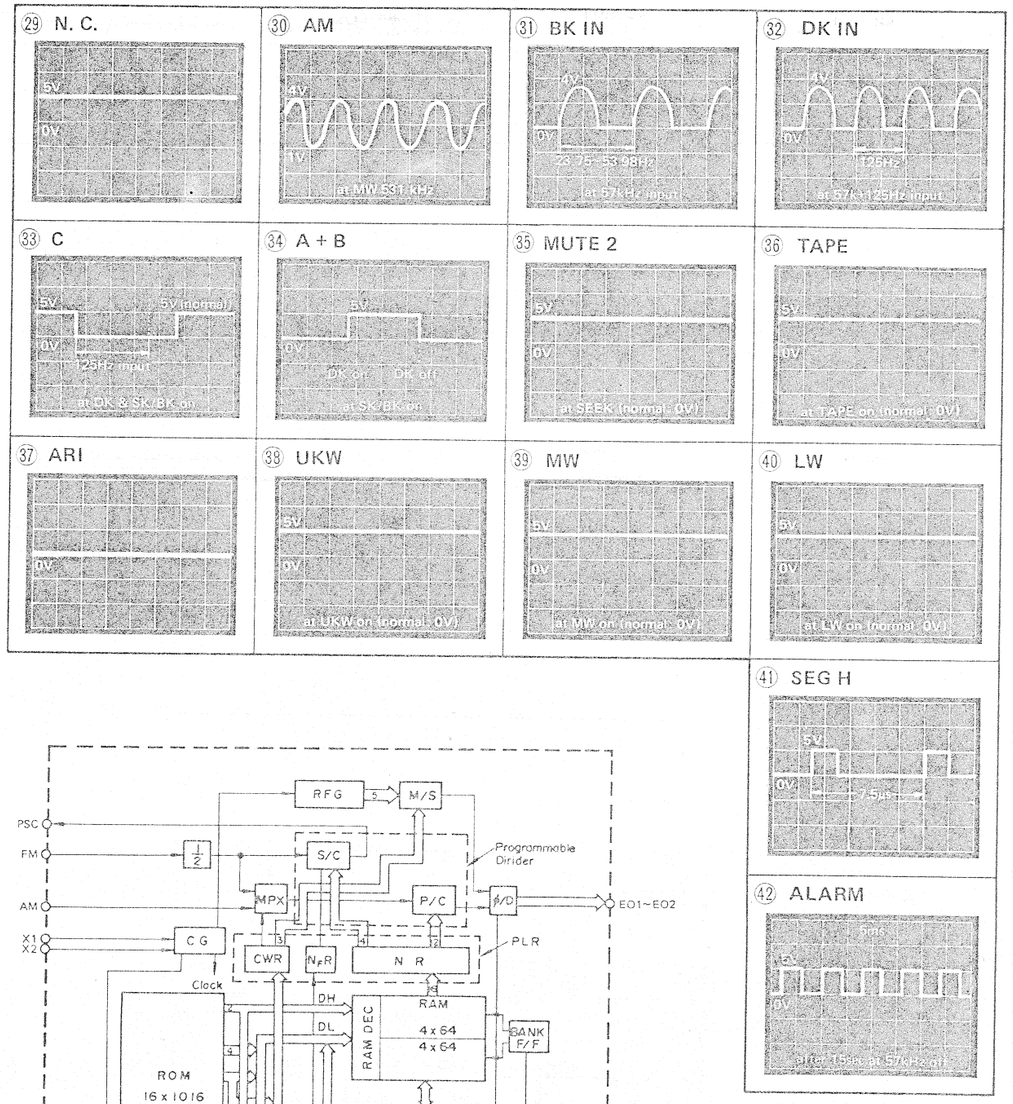


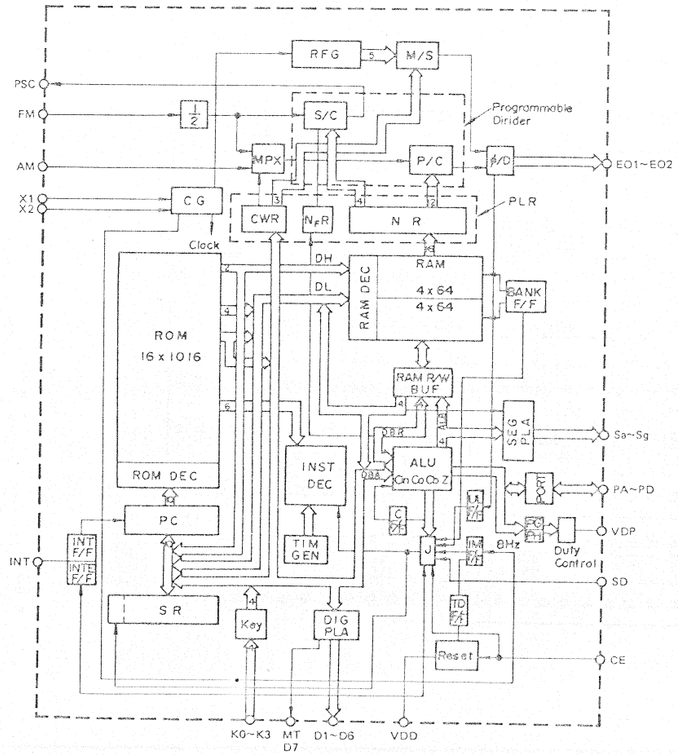

# OPERATION OF MICROCOCOMPUTER/BEDIENUNG DES MIKROCOMPUTERS

## FEATURES OF MICROCOMPUTER' YEAMUPD1704C

- Built-in a 24-hour clock.
- Seek up and down, scan up and auto-tuning.
- Available to change channel plane on LW band.
- Fine-step receiving, a 1 kHz on LW/MW bands, a 25 kHz on UKW band.
- 6-preset memory and a last station memory for each band of LW/MW/UKW.
- Built-in full ARI function.
- Available to operate BK search on ARI.

| Terminal | Port | Input | Output | Name & Description |
|---|---|---|---|---|
| 1 | Sa | – | O | Segment Outputs |
| 2 | Sb | – | O | |
| 3 | Sc | – | O | |
| 4 | Sd | – | O | |
| 5 | Se | – | O | |
| 6 | Sf | – | O | |
| 7 | Sg | – | O | |
| 8 | K0 | O | – | Key Return Signal Inputs |
| 9 | K1 | O | – | |
| 10 | K2 | O | – | |
| 11 | K3 | O | – | |
| 12 | D6 | – | O | Digit Outputs |
| 13 | D5 | – | O | |
| 14 | D4 | – | O | |
| 15 | D3 | – | O | |
| 16 | D2 | – | O | |
| 17 | D1 | – | O | |
| 18 | MT/D7 | – | O | Mute Signal Output |
| 19 | X2 | – | O | Crystal, 4.5 MHz |
| 20 | X1 | O | – | |
| 21 | VDD | – | – | Power Supply, +5 V DC |

| Terminal | Port | Input | Output | Name & Description |
|---|---|---|---|---|
| 22 | EO1 | – | Three-State | Error Output (PLL) |
| 23 | GND | – | – | Ground |
| 24 | EO2 | – | Three-State | Error Output (PLL) |
| 25 | CE | O | – | Chip Enable |
| 26 | SD | O | – | Station Detector |
| 27 | FM | O | – | FM OSC Signal Input |
| 28 | PSC | – | O | Prescaler Control |
| 29 | INT | – | – | Interrupt (No Connection) |
| 30 | AM | O | – | AM OSC Signal Input |
| 31 | PC2 | O | – | BK Signal Input (23 ~ 57 kHz) |
| 32 | PC3 | O | – | DK Signal Input (125 Hz) |
| 33 | PB0 | O | O | C Signal Output |
| 34 | PB1 | O | O | A + B |
| 35 | PB2 | O | O | MUTE-2 Output |
| 36 | PB3 | O | O | TAPE Mode Output |
| 37 | PA0 | O | O | ARI |
| 38 | PA1 | O | O | UKW Band Output |
| 39 | PA2 | O | O | MW Band Output |
| 40 | PA3 | O | O | LW Band Output |
| 41 | PD3 | O | O | Segment-H Output |
| 42 | VDP | – | O | Variable Duty Port |

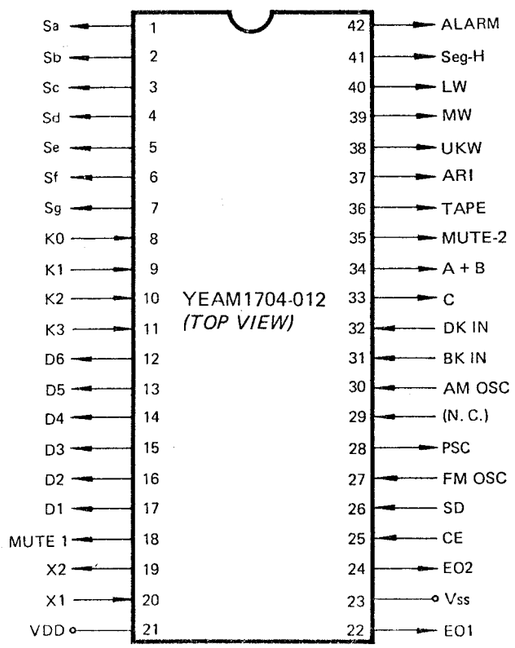




## TRAFFIC INFORMATION SYSTEM/VERKEHRS-AUSKUNFTSYSTEME

**1. SK System**

The FM station transmitting traffic information has a sub-carrier of specific frequency (57 kHz) and sends out broadcast wave of main-carrier frequency-modulated from the sub-carrier. On the receiving station, a muting decoder is incorporated into a radio receiver to detect this 57 kHz frequency while preventing reception of broadcast waves from other stations (stations not transmitting traffic information).

**2. DK System**

Only when transmitting traffic information at a frequency other than 57 kHz (normal), the FM station sends out the main-carrier which has been frequency modulated from the sub-carrier amplitude-modulated at 125 Hz. The receiving station incorporates a decoder into a radio receiver and the decoder detects 125Hz on 57kHz frequency to enable hearing of only traffic information. When the radio receiver is equipped with a tape player, reception of traffic information (with the receiver tuned to the traffic information transmitting station) during tape play will shut off tape playing for the priority on the hearing of traffic information.

**3. BK System**

This system is an improved version of the system of above 2-2. The entrie area of West Germany is divided into six blocks of A, B, C, D, E, and F. The FM station in each block has a frequency (57 kHz/integer) respectively of 23.75 Hz, 28.27 Hz, 34.93 Hz, 39.58 Hz, 45.67 Hz, and 53.98 Hz as an area signal. The frequency is amplitude modulated at 57 kHz with a modulation ratio of 60%. The receiving station can select the block by a selector switch (e.g., BK reception at "A" for the block A). Once the receiver is set to the traffic information transmitting FM station in a required block, it can receive detailed traffic information for the selected block. In order to detect the area signal from 23.75 - 53.98 Hz of each block, the radio receiver generally employs the method of dividing 57 kHz by 1/2400 - 1/1056 and of detecting by phase this signal and area signal on 57 kHz frequency.

**4. Frequency Spectrum**

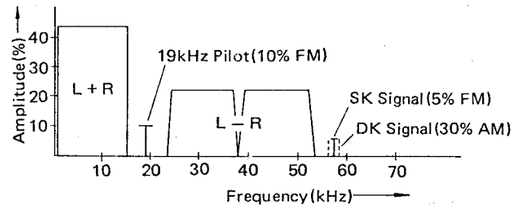


**5. Program & Main/Sub Carrier of Traffic Information FM Station**

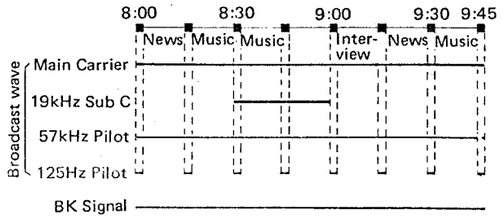


**1. Das SK System**

Der Verkehrsauskunft gebende UKW Rundfunksender hat einen Hilfsträger mit spezifischer Frequenz (57 kHz) und sendet eine Hauptträger-Rundfunkwelle aus, die von dem Hilfsträger frequenzmoduliert ist. An der Empfangsstation ist ein Stummabstimmungs-Dekodierer in einen Empfangsapparat eingebaut zur Entdeckung dieser 57 kHz Frequenz, der die Aufnahme von Rundfunkwellen anderer Sender (Sender die keine Verkehrsauskunft übermitteln) verhindert.

**2. Das SK System**

Der UKW Rundfunksender sendet nur dann eine Hauptträger-Rundfunkwelle, die von einer von 125 Hz amplitudenmodilierter Frequenz mit dem Hilfsträger frequenzmodiliert wurde, aus wenn Verkehrsauskunft mit einer anderen als der normalen 57 kHz-Frequenz übermittelt wird. An der Empfangsstation ist ein Stummabstimmungs Dekodierer eingebaut und mit diesem Dekodierer kann man Frequenzen von 125 Hz oder 57 kHz entdecken, damit nur Verkehrsauskunft gehört wird. Wenn der Radioempfänger mit einem Tonbandgerät versehen ist wird die Aufnahme von Verkehrsauskunft (wenn der Empfänger auf eine Verkehrsauskunft sendende Sation eingestellt ist) am Tonbande abgestellt, um dem Hören von Verkehrsauskunft Vorzug zu geben.

**3. Das BK System**

Dieses System ist eine verbesserte Darstellung des oben beschreibten 2-2 Systems. Das ganze Gebiet der Bandesrepublik Deutschland ist auf sechs Zonen A, B, C, D, E und F eingeteilt. Der UKW Rundfunksender in jeder Zone hat ein 57 kHz/Ganzzahl Frequenz von bzw. 23.75 Hz, 28.27 Hz, 34.93 Hz, 39.58 Hz, 45.67 Hz und 53.98 Hz als Bezirk-Signal. Die Frequenz ist bei 57 kHz mit einem Modulationswert von 60% amplitudenmoduliert. Die Empfangsstation kann eine Zone mit einem Wahlschalter wählen (z.B. BK Empfang an Stellung "A" für die A Zone). Wenn der Empfänger auf die Verkehrsauskunft sendende UKW Rundfunkstation in einer gewünschten Zone eingestellt ist, kann ausführliche Verkehrsauskunft über die gewählte Zone empfangen werden. Um das Bezirksignal von 23.75 bis 53.98 Hz in jeder Zone zu entdecken, wird bei dem Empfänger eine Methode verwendet in welcher 57 kHz mit 1/2400 bis 1/1056 dividiert wird und das Signal und Bezirksignal auf der 57 kHz Frequenz mit Phasendetektion vernommen wird.

**6. Pilot Signal**

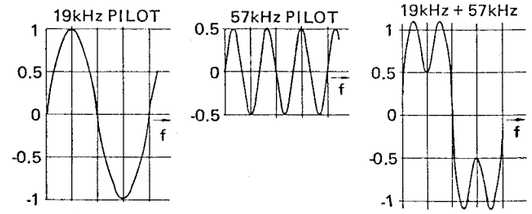


AUDIO SIGNAL w/19kHz + 57kHz

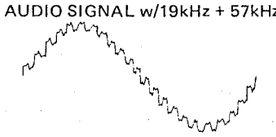

**7. Traffic Area Identification**

| Area | Frequency | Ratio | Area | Frequency | Ratio |
|---|---|---|---|---|---|
| A | 23.75Hz | 2400 | D | 39.58Hz | 1440 |
| B | 28.27Hz | 2016 | E | 45.67Hz | 1248 |
| C | 34.93Hz | 1632 | F | 53.98Hz | 1056 |

# ALIGNMENT INSTRUCTIONS

- Power supply voltage: DC 14.4 V
- Output impedance: 4 Ω
- Output power: 0.5 W
- Balance control: Center
- Tone control: Center
- Volume control: Set for 0.5 W output
- Loudness switch OFF
- DX/LOCAL switch: DX

## 1. VARACTOR VOLTAGE ALIGNMENT

| Step | Alignment Item | Band Selector | VTVM Connection | Display | Adjust | Remarks |
|---|---|---|---|---|---|---|
| 1 | LW VARACTOR VOLTAGE | LW | TP2 – Ground (Var.) | 153 kHz | L103 | • Adjust for 1.2 V |
| 2 | | | | 281 kHz | C117 | • Adjust for 5.0 V<br>• Repeat steps 2 & 3 times, and finish at C117. |
| 3 | MW VARACTOR VOLTAGE | MW | | 531 kHz | L104 | • Adjust for 1.2 V |
| 4 | | | | 1602 kHz | C121 | • Adjust for 9.0 V<br>• Repeat steps 2 & 3 times, finish at C121. |
| 5 | UKW VARACTOR VOLTAGE | UKW | | 87.5 MHz | L54 | • Adjust for 1.2 V |
| 6 | | | | 108.0 MHz | C69 | • Adjust for 9.0 V<br>• Repeat steps 2 & 3 times, and finish at C69. |

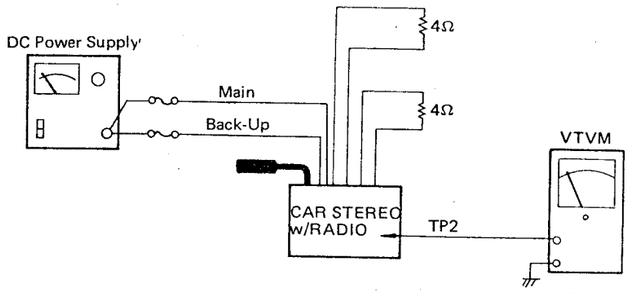


## 2. LW/MW I-F ALIGNMENT

| Step | Align ment Item | Band Selector | Signal Generator | Input Terminal | VTVM Connection | Display | Adjust | Remarks |
|---|---|---|---|---|---|---|---|---|
| 7 | MW I-F | MW | 900 kHz [400 Hz Mod.] | Antenna receptacle | R139 – Ground | 900 kHz | IFT 101<br>IFT 102 | • Adjust for maximum |

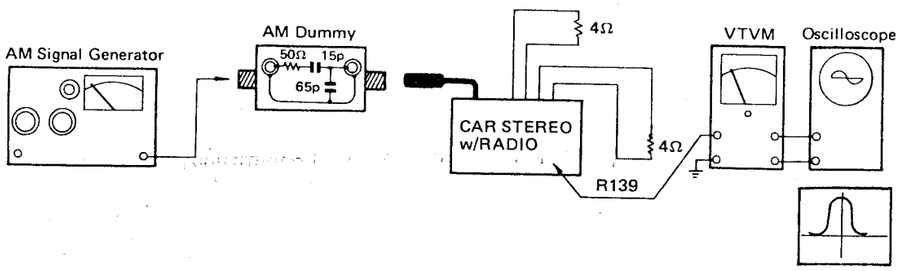




## 3. UKW I-F ALIGNMENT

| Step | Align ment Item | Band Selector | Signal Generator | Input Terminal | VTVM Connection | Display | Adjust | Remarks |
|---|---|---|---|---|---|---|---|---|
| 8 | UKW I-F | UKW | 10.7 MHz | Antenna receptacle | C159 – Ground (U-Curve) | 95.1 MHz | IFT51 | • Adjust for maximum amplitude and symmetrical curve. |
| 9 | | | | | TP1 – Ground (S-Curve) | | IFT150 | • Adjust for maximum amplitude and proper linearity between about ±100 kHz markers. |

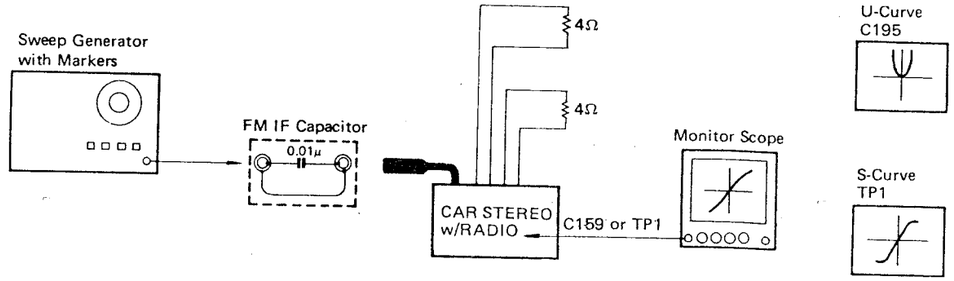


## 4. LW/MW/UKW RF ALIGNMENT

| Step | Align ment Item | Band Selector | Signal Generator | Input Terminal | VTVM Connection | Display | Adjust | Remarks |
|---|---|---|---|---|---|---|---|---|
| 10 | LW RF | LW | 164 kHz [400Hz Mod.] | Antenna receptacle | Speaker Terminal | 164 kHz | L101<br>L106 | • Adjust for maximum.<br>• Repeat steps 2 & 3 times, and finish at high frequency of each alignment item. |
| 11 | | | 263 kHz [400Hz Mod.] | | | 263 kHz | C111<br>C128 | |
| 12 | MW RF | MW | 603 kHz [400Hz Mod.] | | | 603 kHz | L102<br>L105 | |
| 13 | | | 1404 kHz [400Hz Mod.] | | | 1404 kHz | C109<br>C126 | |
| 14 | UKW RF | UKW | 88.1 MHz [400Hz Mod.] | | | 88.1 MHz | L52<br>L53 | |
| 15 | | | 107.9 MHz [400Hz Mod.] | | | 107.9MHz | C54<br>C62 | |

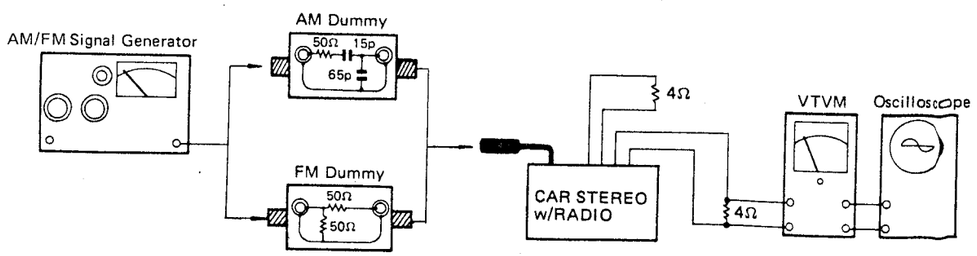

## 5. UKW AGC ALIGNMENT

| Step | Alignment Item | Band Selector | Signal Generator | Input Terminal | VTVM Connection | Display | Adjust | Remarks |
|---|---|---|---|---|---|---|---|---|
| 16 | UKW AGC | UKW | 98.1 MHz 54 dB [400Hz Mod.] | Antenna receptacle | Speaker Terminals | 98.1 MHz | VR150 | • Set volume control for 0.5 W output. • Attenuate signal generator output to 16 dB(μV) and adjust for 2 dB down output. |

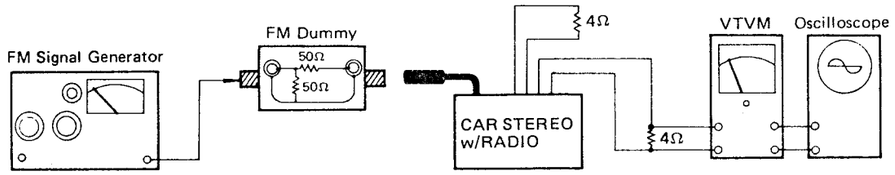


## 6. SEARCH SENSITIVITY ALIGNMENT

| Step | Alignment Item | Band Selector | Signal Generator | Input Terminal | VTVM Connection | Display | Adjust | Remarks |
|---|---|---|---|---|---|---|---|---|
| 17 | UKW Serch Trigger | UKW | 98.108 MHz 54 dB [non-Mod.] | Antenna receptacle | TP4—Ground | 98.1 MHz | IFT850 | • Short circuit between TP3 and ground. • Adjust for maximum. |
| 18 | LW/MW Serch Sens. | MW | 999 kHz 29 dB [400 Hz Mod.] | Antenna receptacle | Speaker Terminals | 999 kHz | VR850 | • Set DX/LOC in DX. • Adjust to stop search tuning at 29 dB input. |

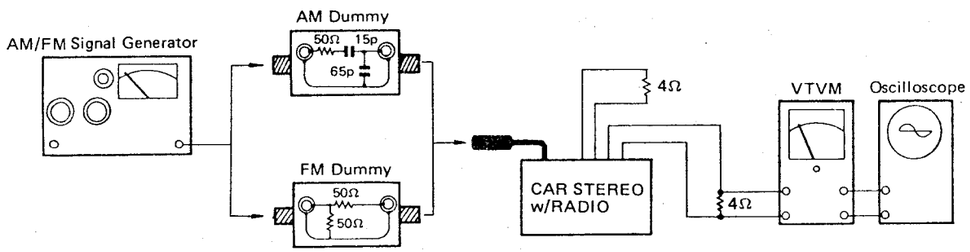


## 7. UKW MULTIPLEX ALIGNMENT

| Step | Alignment Item | Band Selector | Signal Generator | Input Terminal | VTVM Connection | Display | Adjust | Remarks |
|---|---|---|---|---|---|---|---|---|
| 19 | UKW MPX | UKW | no signal | ..... | Frequency Counter TP2—Ground (19kHz) | ..... | VR552 | • Connect a 1μ50V between TP1 and ground. • Adjust for 19 kHz ±30 Hz. |
| 20 | | | 89.9 MHz 54 dB [400Hz Mod.] | Antenna receptacle | Speaker Terminal | 89.9 MHz | VR551 | • Set VR553 fully cockwise. • Adjust for maximum separation. |



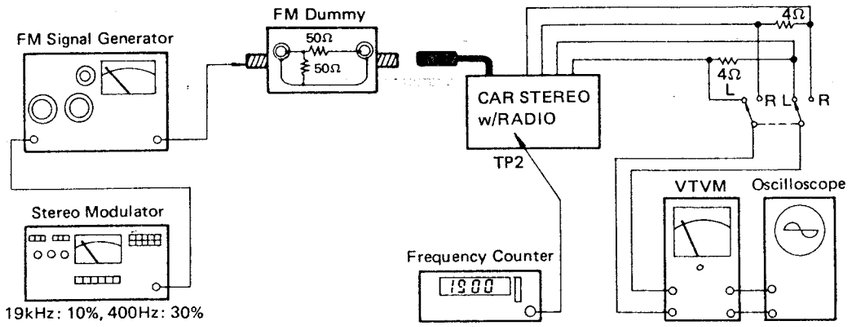


## 8. ASC ALIGNMENT

| Step | Alignment Item | Band Selector | Signal Generator | Input Terminal | VTVM Connection | Display | Adjust | Remarks |
|---|---|---|---|---|---|---|---|---|
| 21 | ASC | UKW | 89.9 MHz 38 dB [400Hz Mod.] | Antenna receptacle | Speaker Terminals | 89.9 MHz | VR553 | • Adjust for 20 dB separation. |

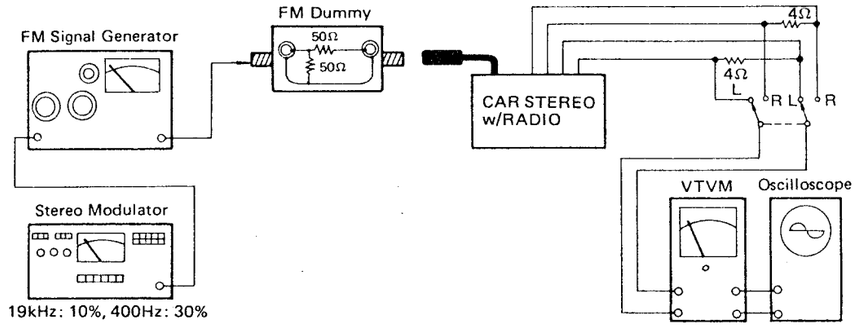


## 9. SK/BK ALIGNMENT

| Step | Alignment Item | Band Selector | Signal Generator | Input Terminal | VTVM Connection | Display | Adjust | Remarks |
|---|---|---|---|---|---|---|---|---|
| 22 | VF | SK/BK | ..... | ..... | Frequency Counter TP2—Ground (57kHz) | ..... | VR152 | • Connect a 1μ50V between TP1 and ground. • Adjust for 57 kHz±100 Hz. |

NOTE: This SK/BK alignment should be made after set is stable to operate.

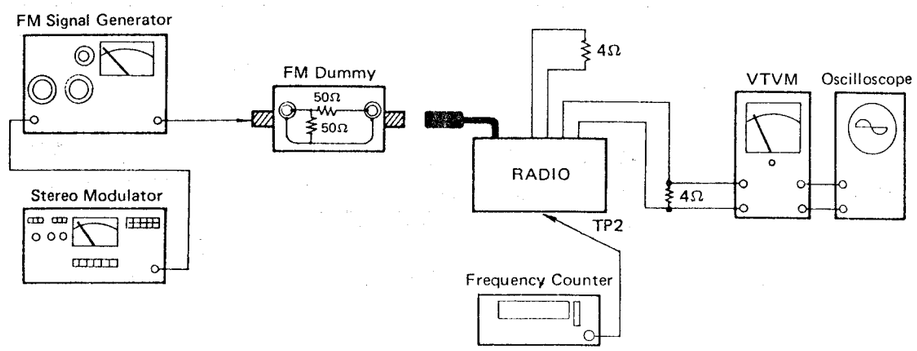

# ABGLEICH-ANLEITUNG

- Stromspannung: DC 14.4 V
- Ausgangsimpedanz: 4 Ω
- Ausgangsleistung: 0.5 W
- Balanceregler: Mitte
- Tonregler: Mitte
- Lautstärkeregler: Auf 0.5 W einstellen.
- DX/LOCAL: DX
- Loudness: AUS

## 1. VARACTOR-ABGLEICH

| Stufe | Abgleichobjekt | Stellung des Wellenbereich-umschalters | Anschluß des Anzeigeinstruments | Anzeige | Abgleich | Anmerkung |
|---|---|---|---|---|---|---|
| 1 | LW VARACTOR SPANNUNG | LW | TP2—Erdung | 153 kHz | L103 | • Auf 1.2 V stellen. |
| 2 | | | | 281 kHz | C117 | • Auf 5.0 V stellen.<br>• Die Schritte 2 - 3 mal wiederholen und bei C117 aufhören. |
| 3 | MW VARACTOR SPANNUNG | MW | | 531 kHz | L104 | • Auf 1.2 V stellen. |
| 4 | | | | 1602 kHz | C121 | • Auf 9 V stellen.<br>• Die Schritte 2 - 3 mal wiederholen und bei C121 aufhören. |
| 5 | UKW VARACTOR SPANNUNG | UKW | | 87.5 MHz | L54 | • Auf 1.2 V stellen. |
| 6 | | | | 108.0 MHz | C69 | • Auf 9 V stellen.<br>• Die Schritte 2 - 3 mal wiederholen und bei C69 aufhören. |

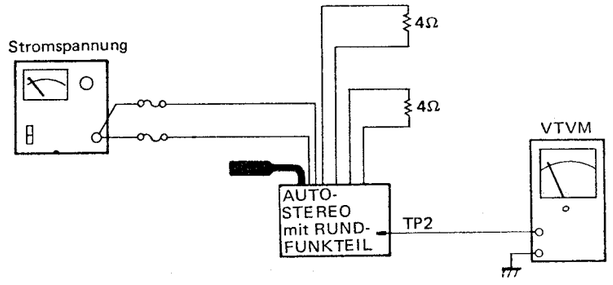


## 2. ABGLEICH VON LW/MW-ZF

| Stufe | Abgleich-objekt | Stellung des Wellenbereich-umschalters | Meßsender-frequenz | Ankopplung des Meßsenders | Anschluß des Anzeigeinstru-ments | Anzeige | Abgleich | Ammerkung |
|---|---|---|---|---|---|---|---|---|
| 7 | MW I-F | MW | 900 kHz [400Hz Mod.] | Antennen steckdose | R139—Erdung | 900 kHz | IFT 101<br>IFT 102 | • Auf maximum stellen. |

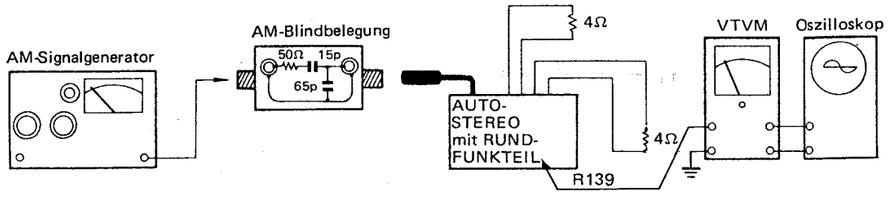




## 3. ABGLEICH VON FM-ZF

| Stufe | Abgleich-objekt | Stellung des Wellenbereich-umschalters | Signal-generator | Ankopplung des Meßsenders | Anschluß des Anzeigeinstru-ments | Anzeige | Abgleich | Ammerkung |
|---|---|---|---|---|---|---|---|---|
| 8 | UKW I-F | UKW | 10.7 MHz | Antennen-steckdose | C159—Erdung (U-Kurve) | 95.1 MHz | IFT51 | • Auf maximale Amplitude und symmetrische Kurve einstellen. |
| 9 | | | | | TP1—Erdung (S-Kurve) | | IFT150 | • Auf maximale Amplitude korrekte Linearität zwischen ±100kHz einstellen. |

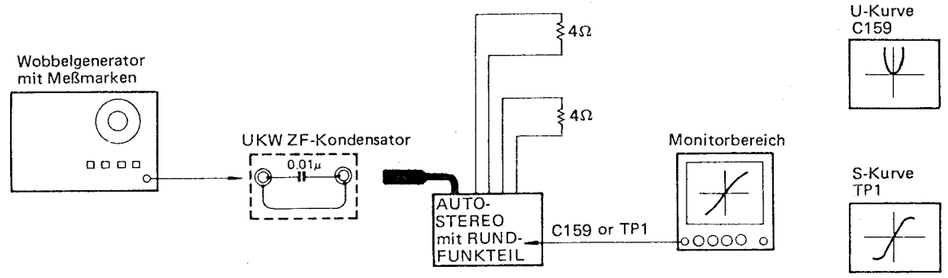


## 4 ABGLEICH VON LW/MW/UKW-HF

| Stufe | Abgleich-objekt | Stellung des Wellenbereich-umschalters | Meßsender-frequenz | Ankopplung des Meßsenders | Anschluß des Anzeigeinstru-ments | Anzeige | Abgleich | Ammerkung |
|---|---|---|---|---|---|---|---|---|
| 10 | LW RF | LW | 164 kHz [400 Hz Mod.] | Antennen-steckdose | Lautsprecher-anschlüsse | 164 kHz | L101<br>L106 | • Auf maximum stellen.<br>• Die Schritte 2 - 3 mal wiederholen und bei der hohen Frequenz für jeden Abgleichungspunkt aufhören. |
| 11 | | | 263 kHz [400 Hz Mod.] | | | 263 kHz | C111<br>C128 | |
| 12 | MW RF | MW | 603 kHz [400 Hz Mod.] | | | 603 kHz | L102<br>L105 | |
| 13 | | | 1404 kHz [400 Hz Mod.] | | | 1404 kHz | C109<br>C126 | |
| 14 | UKW RF | UKW | 88.1 MHz [400 Hz Mod.] | | | 88.1 MHz | L52<br>L53 | |
| 15 | | | 107.9 MHz [400 Hz Mod.] | | | 107.9 MHz | C54<br>C62 | |

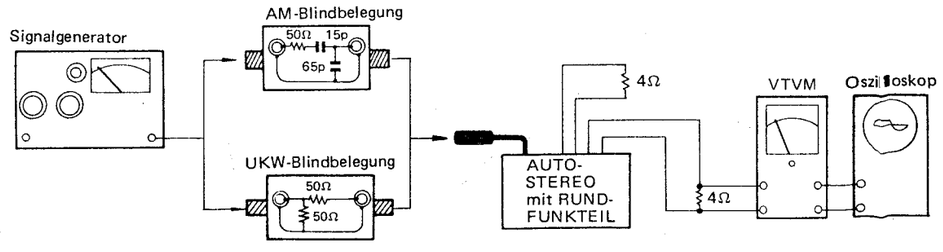

## 5. ABGLEICH VON UKW AGC

| Stufe | Abgleich-objekt | Stellung des Wellenbereich-umschalters | Meßsender-frequenz | Ankopplung des Meßsenders | Anschluß des Anzeigeinstru-ments | Anzeige | Abgleich | Ammerkung |
|---|---|---|---|---|---|---|---|---|
| 16 | UKW AGC | UKW | 98.1 MHz 54 dB [400Hz Mod.] | Antennen steckdose | Lautsprecher anschlusse | 98.1 MHz | VR150 | • Den Lautstäkeregler auf 0.5W einstellen. • Das Signal zu 16 dB gedämpft wird, und auf - 2 dB. |

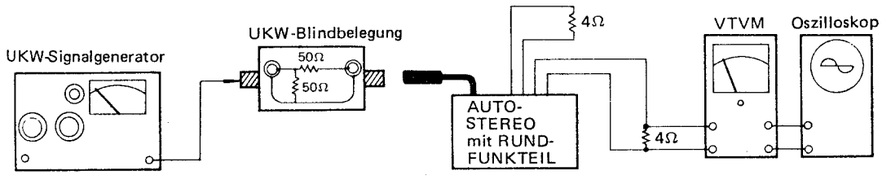


## 6. ABGLEICH VON SUCHEREMPFINDLICHKEIT

| Stufe | Abgleich-objekt | Stellung des Sellenbereich-umschalters | Meßsender-frequenz | Ankopplung des Meßsenders | Anschluß des Anzeigeinstru-ments | Anzeige | Abgleich | Ammerkung |
|---|---|---|---|---|---|---|---|---|
| 17 | UKW Sucher | UKW | 98,108 MHz 54 dB [400Hz Mod.] | Antennen steckdose | TP4—Erdung | 98.1 MHz | IFT850 | • Verkürzen dazwischen TP3 und Erdung. •Auf maximum stellen. |
| 18 | LW/MW Sucher | MW | 999 kHz 29 dB [400Hz Mod.] | Antennen steckdose | Lautsprecher anschlusse | 999 kHz | VR850 | • DX/LOC auf DX setzen. • Auf 29 dB Signal Sperrung einstellen. |

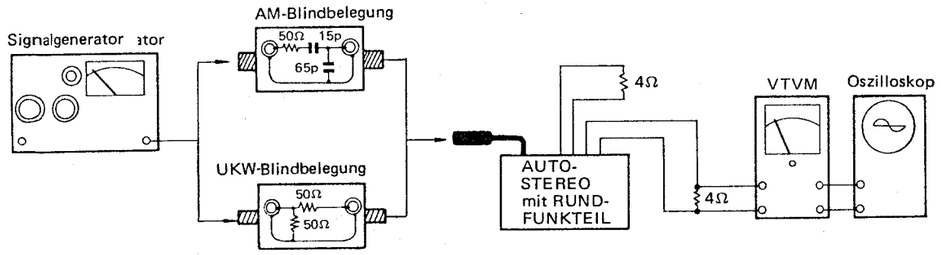


## 7. ABGLEICH VON MULTIPLEX

| Stufe | Abgleich-objekt | Stellung des Wellenbereich-umschalters | Meßsender-frequenz | Ankopplung des Meßsenders | Anschluß des Anzeigeinstru-ments | Anzeige | Abgleich | Ammerkung |
|---|---|---|---|---|---|---|---|---|
| 19 | UKW MPX | UKW | no signal | ..... | Frequenz Zähler: TP2—Erdung (19kHz) | ..... | VR552 | • Zwischen 1μ50V TP1 und Erdung. • Auf 19kHz. ±30 Hz einsteller. |
| 20 | | | 89.9 MHz 54 dB [400 Hz Mod.] | Antennen steckdose | Lautsprecher anschlusse | 89.9 MHz | VR551 | • Auf Maximum Trennung. |



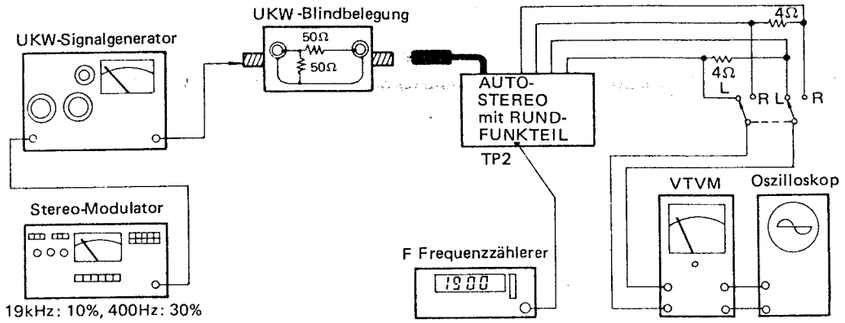


## 8. ABGLEICH VON ASC

| Stufe | Abgleich-objekt | Stellung des Wellenbereich-umschalters | Meßsender-frequenz | Ankopplung des Meßsenders | Anschluß des Anzeigeinstru-ments | Anzeige | Abgleich | Ammerkung |
|---|---|---|---|---|---|---|---|---|
| 21 | ASC | UKW | 89.9 MHz 38 dB [400 Hz Mod.] | Antennen steckdose | Lautsprecher anschlusse | 89.9 MHz | VR553 | • Auf 20 dB Trennung. |

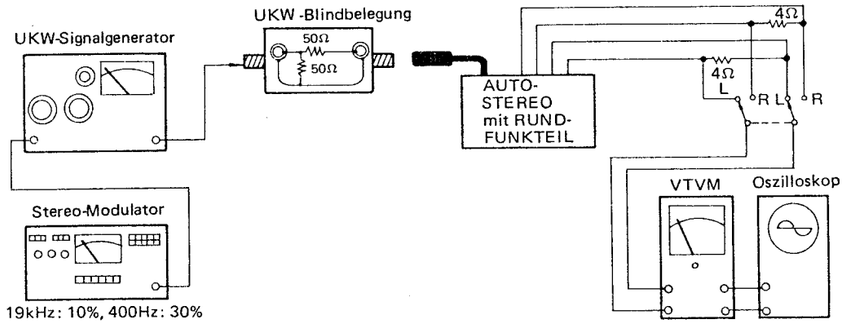


## 9. ABGLEICH VON SK/BK

| Stufe | Abgleich-object | Stellung des Wellenbereich-umschalters | Meßsender-frequenz | Ankopplung des Meßsenders | Anschluß des Anzeigeinstru-ments | Anzeige | Abgleich | Ammerkung |
|---|---|---|---|---|---|---|---|---|
| 22 | -VF | SK/BK | ..... | ..... | Frequenz zähler: TP2—Erdung (57kHz) | ..... | VR152 | • Zwischen 1μ50V TP1 und Erdung. • Auf 57 kHz ±100Hz einstellen. |

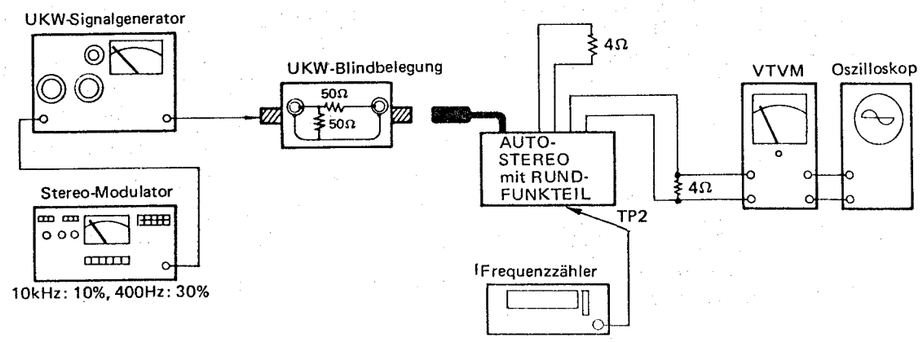

## ALIGNMENT POINTS/ABGLEICHPUNKTE

### TOP VIEW, WITH DECK REMOVED

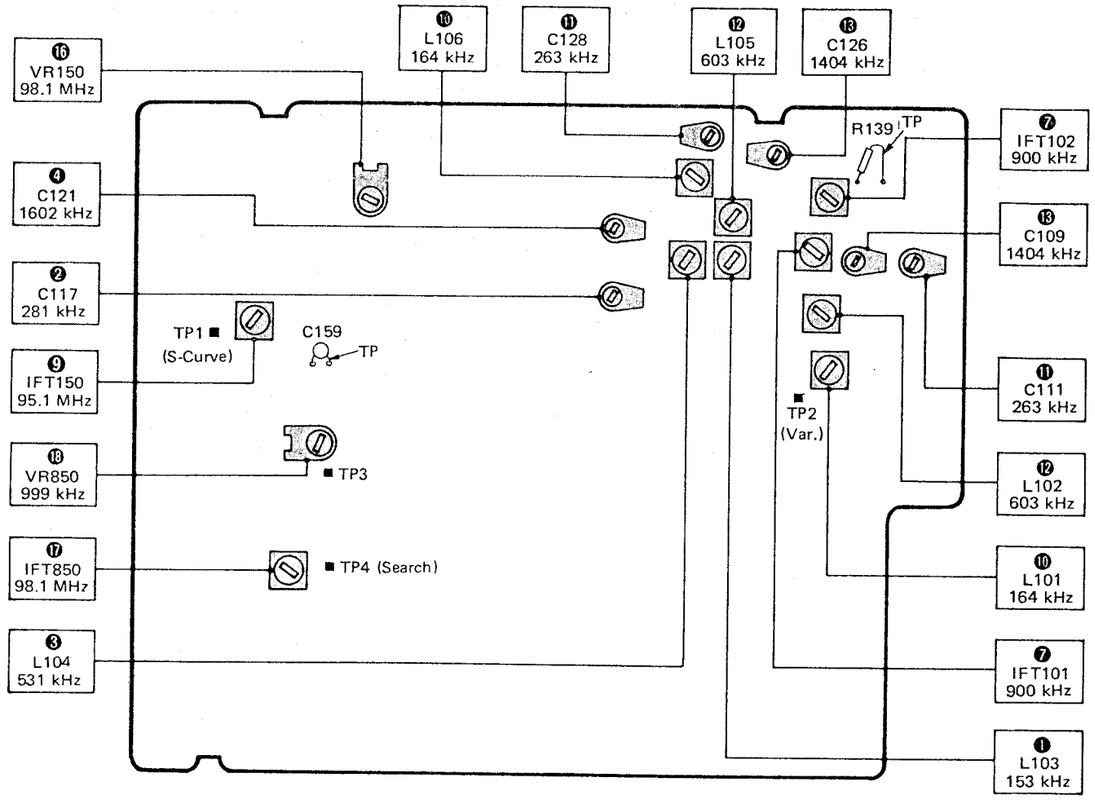


### TOP VIEW, WITH COVER REMOVED

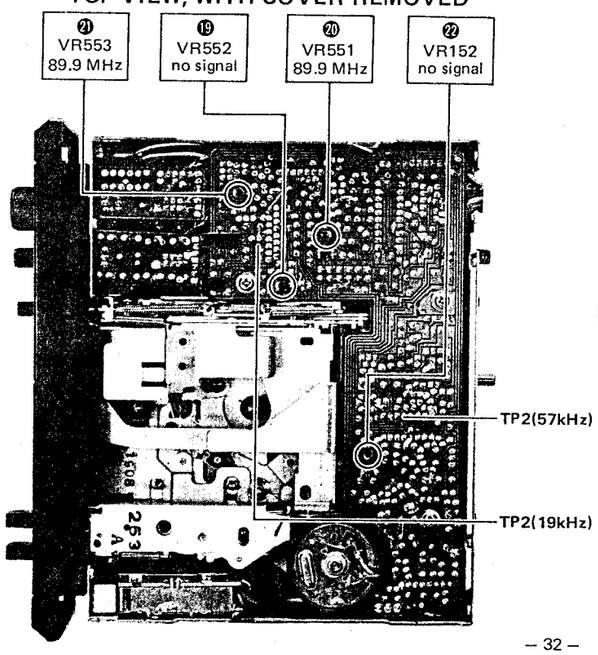


### RIGHT SIDE VIEW

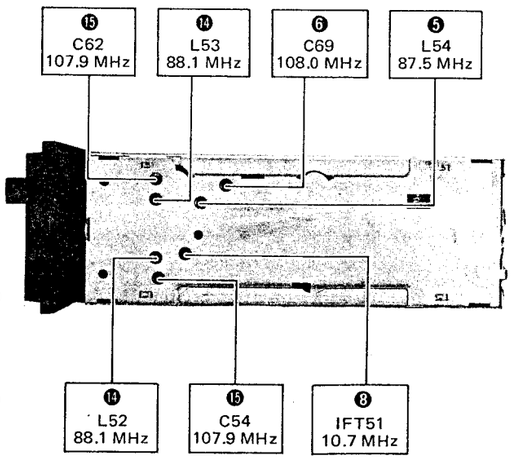




## SERVICING HINT FOR CASSETTE DECK/WARTUNGSHINWEISE FÜR DAS CASSETTENDECK

**REPLACEMENT OF CASSETTE GUIDE SUB ASS'Y**
**[includes Holder Plate Sub Ass'y, Eject Lever Sub Ass'y, Eject Guide Arm Sub Ass'y and relative parts]**

1) Remove 2 screws.
2) Remove the cassette guide sub ass'y from the chassis.

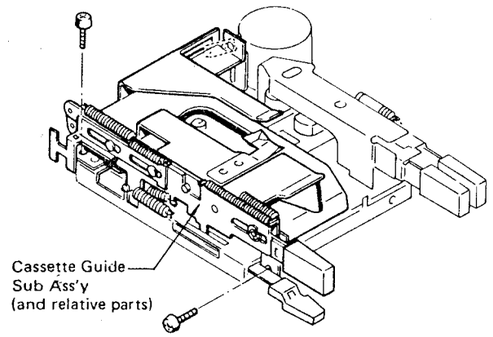


**REPLACEMENT OF GEAR PLATE SUB ASS'Y**
**[includes Idler Gear (B) and relative parts]**

1) Remove the cassette guide sub ass'y as described above.
2) Remove 2 screws.
3) Remove the gear plate sub ass'y from the chassis.

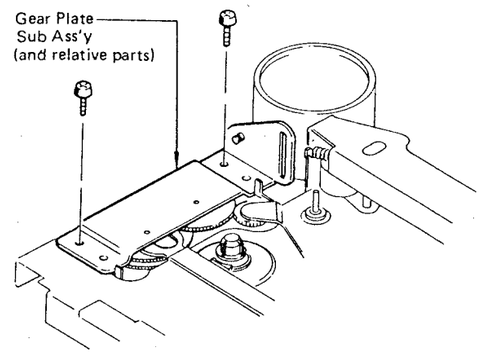


**REPLACEMENT OF LEVER MOUTING SUB ASS'Y**
**[includes REW Lever, FF Lever, FF Lever Cam and relative parts]**

1) Remove 1 screw.
2) Remove the lever mounting sub ass'y from the chassis.

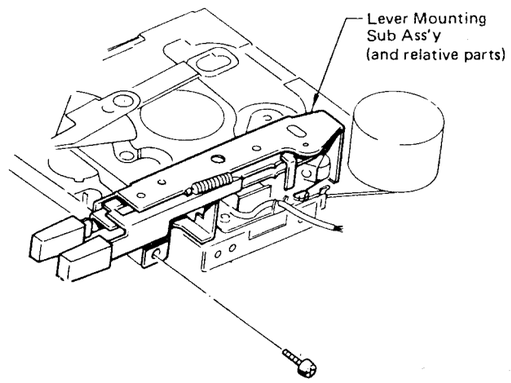


**REPLACEMENT OF REEL PLATE SUB ASS'Y**
**[includes Head Base Action Plate Sub Ass'y, Take-Up Reel, Supply Reel and relative parts]**

1) Remove 3 screws.
2) Unhook the drive belt from the motor pulley.
3) Remove the reel plate sub ass'y together the flywheel.

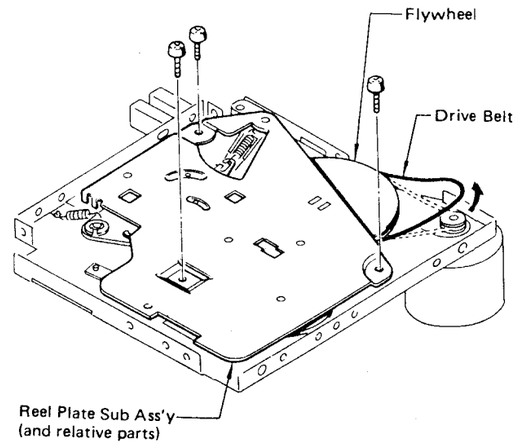

# OPERATION OF REPEATRACK AND RADIO MONITORING CASSETTE DECK/BEDIENUNG VON WIEDERHOLSPUR UND RADIO-MONITOR-CASSETTENDECK

## INSERTING

*The cassette tape is inserted.*

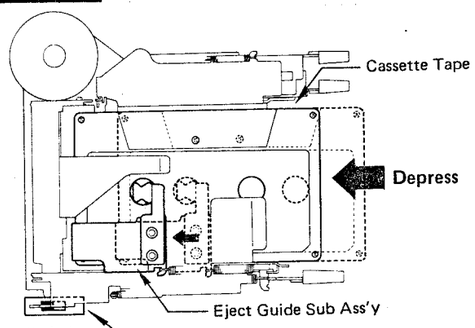


## LOADING

*The cassette tape is loaded and the DC motor starts to rotate.*

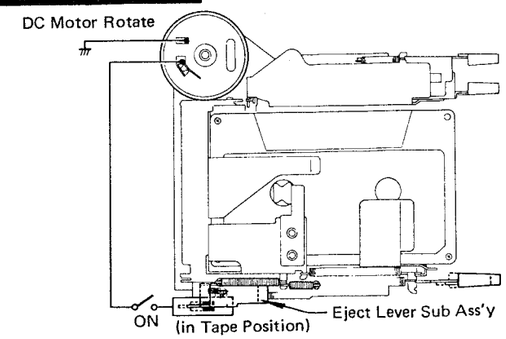


## PLAYING

*The head base sub ass'y is sloded and the tape reproduces.*

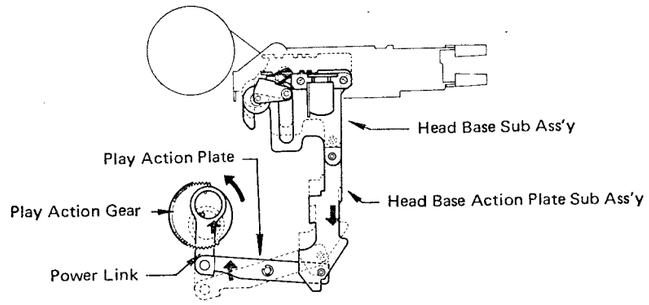


## DRIVING

*Cassette Deck Driving Mechanism*

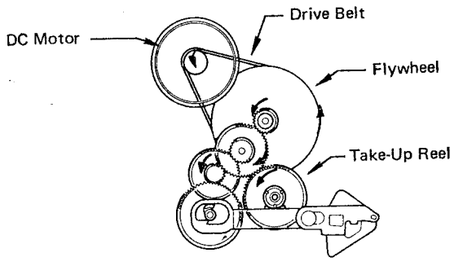


## RADIO MONI

*During tape playback, push the eject button lightly and the unit selects the radio.*

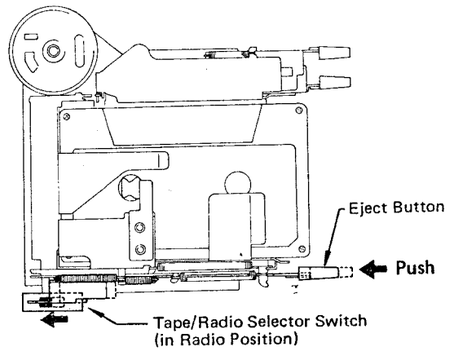


## REWINDING

*To repeat the same program, push and lock the REW button.*

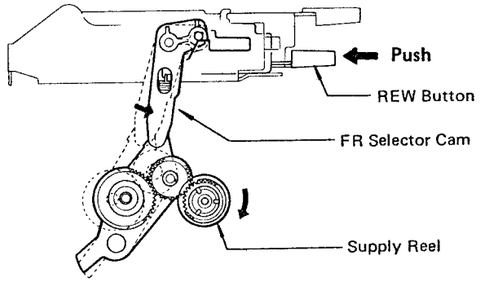


## FAST FORW

*To skip part of theprogram on the tape, push and lock the FF button.*

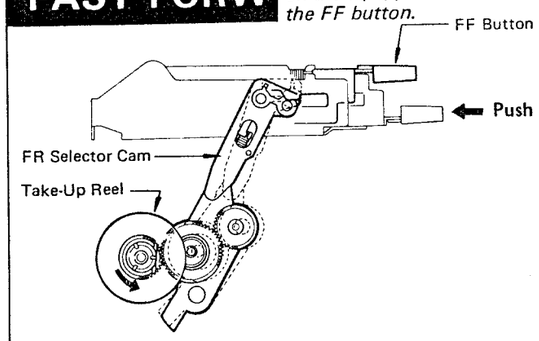


## AT TAPE END

*When the tape reaches its end, the unit will automatically switch to radio.*

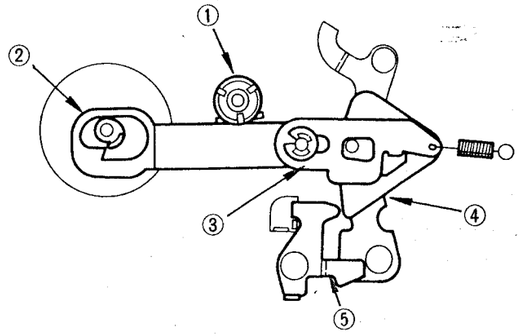


① The take-up reel stops to rotates.

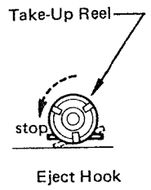


② The ejcect hook catches the nail of the detecting cam.

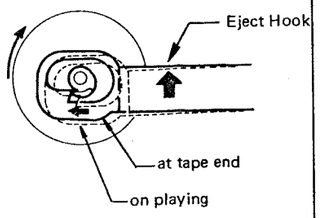


③ The eject hook action plate slides.

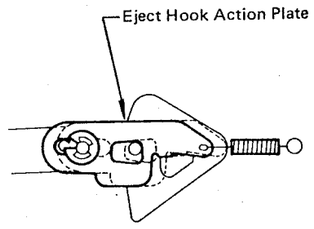


④ The cam turns to depress the lever.

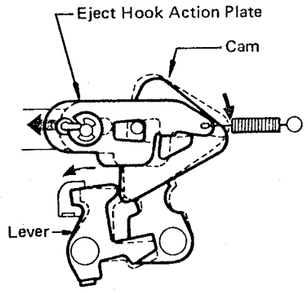


⑤ The head base action plate unhooks and it releases.

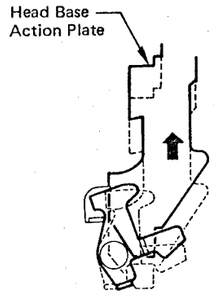

# EXPLODED VIEW(UNIT)/AUFGELÖSTE DARSTELLUNGS(GANZES GERÄT)

■ Numbers in ○ are indicated REF. NO. in the REPLACEMENT PARTS LIST.

■ The symbols next to the screws indicate as follows.

| | | | | |
|---|---|---|---|---|
| M130 | ⊕ | YEJT03015 | ⊕ Screw | 3mmφ×6mm |
| M131 | ✣ | YEJT03013 | ⊕ Screw | 3mmφ×12mm |
| M132 | ▣ | XSB26+4FX | ⊕ Screw Taptite | 2.6mmφ×4mm |
| M133 | ※ | XTB3+6FFXS | ⊕ Screw Taptite | 3mmφ×6mm |
| M134 | ▲ | XTB3+8FFXS | ⊕ Screw, Taptite | 3mmφ×8mm |
| M135 | ◎ | YEJT03008 | Screw | |

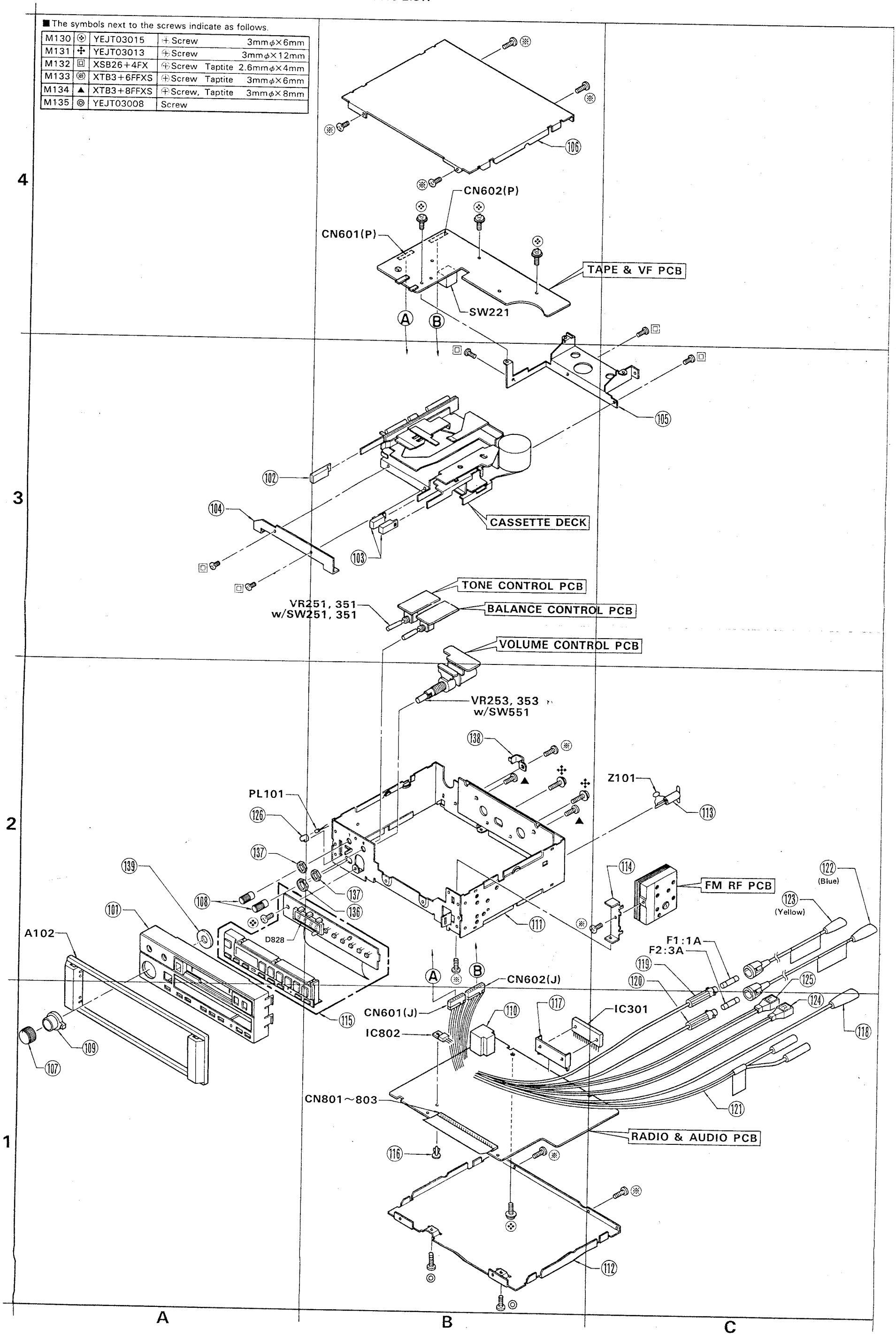

# Replacement Parts List
## Model NO. CQ-884EG

NOTES:
1. Be sure to make your orders of replacement parts according to this list.
2. Important safety notice: Components identified by ⚠ mark have special characteristics important for safety. When replacing any of these components, use only manufacture's specified parts.
3. Next to the Ref. No. in the parts list is a location key, to show the general location of the parts shown in the exploded drawing, as in a road map.

| Ref. No. | Part No. | Part Name & Description | Pcs Set | Remarks |
|---|---|---|---|---|
| | | **MISCELLANEOUS** | | |
| ⚠F 1 (2-C) | XBB1C10NR1 | Fuse, 1 A | 1 | |
| ⚠F 2 (2-C) | XBB1C30NR1 | Fuse, 3 A | 1 | |
| PL101 (2-A) | YEAL30606WL | Pilot Lamp | 1 | |
| Z101 (2-C) | ERZD03DS331 | Varister | 1 | |
| CN601J (1-B) | EMCM0712D61 | 7P Jack | 1 | |
| CN601P (4-B) | EMCS0752M | 7P Plug | 1 | |
| CN602J (2-B) | EMCM0912D61 | 9P Jack | 1 | |
| CN602P (4-B) | EMCS0952M | 9P Plug | 1 | |
| CN801 ~ 803 | YEAE01341 | Connector | 3 | |
| M101 (2-A) | YEFC021260 | Escutcheon Ass'y | 1 | |
| M102 (3-A) | YEFE13263 | Button, Eject | 1 | |
| M103 (3-B) | YEFE13264 | Button, FF, Rew | 2 | |
| M104 (3-A) | YEFX0211293 | Mounting Bracket, Deck (Front) | 1 | |
| M105 (3-C) | YEFX0211294 | Mounting Bracket, Deck (Rear) | 1 | |
| M106 (4-B) | YEFA03511A | Upper Cover | 1 | |
| M107 (1-A) | YEFE07194 | Knob, Volume | 1 | |
| M108 (2-A) | YEFE04055A | Knob, Balance | 2 | |
| M109 (1-A) | YEFE08187 | Knob, Stereo/Mono Selector | 1 | |
| M110 (1-B) | YEFA13331 | Case | 1 | |
| M111 (2-B) | YEFA01574 | Chassis Ass'y | 1 | |
| M112 (1-C) | YEFA05253 | Bottom Cover | 1 | |
| M113 (2-C) | YEAA10023 | Antenna Receptacle | 1 | |
| M114 (2-C) | YEFX0211295 | Mounting Bracket, Front End PCB | 1 | |
| M115 (1-B) | YEFX999321 | Keyboard Ass'y | 1 | |
| M116 (1-B) | YEFJ05023 | Color Rivet | 1 | |
| M117 (2-C) | YEFX0211296 | Mounting Bracket, IC | 1 | |
| M118 (1-C) | YEAJ01168 | Power Supply Cord, Motor Antenna | 1 | |
| M119 (2-C) | YEAJ01450 | Power Supply Cord, Back-Up (Yellow) | 1 | |
| M120 (2-C) | YEAJ01490 | Power Supply Cord, Main (Blue) | 1 | |
| M121 (1-C) | YEAJ01438 | Power Supply Cord, Foot Switch | 1 | |
| M122 (2-C) | YEAJ01443 | Power Supply Cord, Main | 1 | |
| M123 (2-C) | YEAJ01451 | Power Supply Cord, Back-Up (Yellow) | 1 | |
| M124 (2-C) | YEAJ04340 | Speaker Cord, Right (Red) | 1 | |
| M125 (2-C) | YEAJ04341 | Speaker Cord, Left (Blue) | 1 | |
| M126 (2-A) | YEFR04159 | Illumination Cap | 1 | |
| M130 | YEJT03015 | ⊕ Screw, Taptite 3mmø x 6mm | 7 | |
| M131 | YEJT03013 | Screw | 2 | |
| M132 | XSB26 + 4FX | ⊕ Screw, Bind 2.6mmø x 4mm | 5 | |
| M133 | XTB3 + 6FFXS | ⊕ Screw, Taptite 3mmø x 6mm | 6 | |
| M134 | XTB3 + 8FFXS | ⊕ Screw, Taptite 3mmø x 8mm | 2 | |
| M135 | YEJT03008 | Screw | 2 | |
| M136 (2-B) | YEJN01037FX | Nut, Hexagon | 1 | |
| M137 (2-A) (2-B) | YEJN01057 | Nut, Hexagon | 2 | |
| M138 (2-B) | YEFX007082 | Cord Clamp | 1 | |
| M139 (2-A) | YEFV02271 | Shade | 1 | |

MODEL CQ-884EG

| Ref. No. | Part No. | Part Name & Description | Pcs Set | Remarks |
|---|---|---|---|---|
| **TAPE PLAYER PARTS** | | | | |
| **HEAD** | | | | |
| H (4-C) | YEAHHY422106 | Playback Head | 1 | |
| | | | | |
| | | | | |
| **MECHANICAL PARTS** | | | | |
| ⚠M201 (3-C) | YASAK01041 | Motor Ass'y | 1 | |
| M202 (4-B) | YEP0FX245 | Head Base Sub Ass'y | 1 | |
| M203 (4-C) | YEAP1056 | Head PCB (no resistor & capacitor) | 1 | |
| M204 (4-C) | YEJS03004FZ | Head Screw | 2 | |
| M205 (3-C) | YEP0FX151B | Main Chassis Sub Ass'y | 1 | |
| M206 (4-C) | YEP0FX247 | Idler Gear Plate Sub Ass'y | 1 | |
| M207 (3-C) | YEP0FX153A | Idler Gear (C) Plate Sub Ass'y | 1 | |
| M208 (2-B) | YEP0FX246 | Head Base Action Plate Sub Ass'y | 1 | |
| M209 (3-B) | YEP0FX156B | Gear Plate Sub Ass'y | 1 | |
| M210 (3-B) | YEFX003134 | Idler Gear (B) | 1 | |
| M212 (4-C) | YEFX218202A | Pinch Roller Ass'y | 1 | |
| M213 (4-B) | YEFX046425A | FR Selector Plate | 1 | |
| M214 (4-B) | YEFX046426A | Eject Hook Action Plate | 1 | |
| M215 (4-C) | YEFX046429A | Eject Hook | 1 | |
| M216 (4-B) | YEFX234133 | Cam | 1 | |
| M217 (3-B) | YEFX030043 | Auto-Stop Plate | 1 | |
| M218 (2-A) | YEFX046419A | Auto-Stop Lever | 1 | |
| M219 (2-B) | YEFX046428A | End Detection Preventing Plate | 1 | |
| M220 (4-C) | YEFX003133 | Idler Gear (A) | 1 | |
| M221 (2-C) | YEFX003135 | Idler Gear (C) | 1 | |
| M222 (1-C) (2-C) | YEFX003136A | Idler Gear (D) | 2 | |
| M223 | YAJW05012 | Polyslider | 1 | |
| M224 (2-C) | YEFX213151 | Flywheel | 1 | |
| M225 (2-C) | YEFR03040A | Drive Belt | 1 | |
| M226 (2-A) | YEFX005593 | Auto-Stop Lever Spring | 1 | |
| M227 (3-B) | YEFX005594 | Play Lock Spring | 1 | |
| M228 (4-B) | YEFX005595A | Eject Hook Spring | 1 | |
| M229 (2-C) | YEFX005596 | Head Base Spring | 1 | |
| M230 (3-C) | YEFX005597 | Idler Gear Spring | 1 | |
| M231 (4-C) | YEFX005598A | Pinch Roller Spring | 1 | |
| M232 (2-C) | YEFX005599 | End Detection Preventing Spring | 1 | |
| M233 (1-C) | YEP0FX158B | Reel Plate Sub Ass'y | 1 | |
| M234 (1-C) | YEFX219115 | Thrust Sheet | 1 | |
| M235 (1-C) | YEFX234134 | FR Selector Cam | 1 | |
| M236 (2-B) | YEFX046436C | Power Link | 1 | |
| M237 (1-B) | YEFX003137 | FR Gear | 1 | |
| M238 (1-B) | YEFX003138 | REW Gear | 1 | |
| M239 (2-B) | YEFX003139 | Detecting Gear | 1 | |
| M240 (2-B) | YEFX003140 | Play Action Gear | 1 | |
| M241 (1-B) | YEFX046437A | Play Action Plate | 1 | |
| M243 (1-C) | YEFX209160A | Take-Up Reel | 1 | |
| M244 (1-B) | YEFX209161B | Supply Reel | 1 | |
| M245 (1-B) | YEFX005619A | Back Tension Spring | 1 | |
| M246 (3-A) | YEFX005603 | Eject Hook Lever Spring | 1 | |
| M247 (1-C) | YEFX005682 | Spring | 1 | |
| M248 | YEFX014019 | Snap Ring | 13 | |
| M249 | YEJE01004 | E-Ring | 15 | |
| M250 (2-C) | YEP0FX248 | Lever Mounting Sub Ass'y | 1 | |
| M251 (2-C) | YEFX046420A | REW Lever | 1 | |
| M252 (2-C) | YEFX046421A | FF Lever | 1 | |
| M253 (2-C) | YEFX234135 | FR Lever Cam | 1 | |
| M254 (2-C) | YEFX046422 | FR Lever Bushing | 1 | |
| M255 (2-C) | YEFX005601 | FF Lever Spring | 1 | |
| M256 (2-C) | YEFX005602 | REW Lever Spring | 1 | |
| M257 (2-C) | YEFX005597 | FR Lock Spring | 1 | |
| M258 (3-A) | YEP0FX249 | Hold Plate Sub Ass'y | 1 | |
| M259 (4-A) | YEP0FX203A | Eject Lever Sub Ass'y | 1 | |
| M260 (2-A) | YEP0FX164A | Cassette Guide Sub Ass'y | 1 | |
| M261 (3-B) | YEP0FX165A | Eject Guide Sub Ass'y | 1 | |

# EXPLODED VIEW(TAPE DECK)/AUFGELÖSTE DARSTELLUNGS(TONBANDGERÄT)

■ Numbers in ○ are indicated REF. NO. in the REPLACEMENT PARTS LIST.

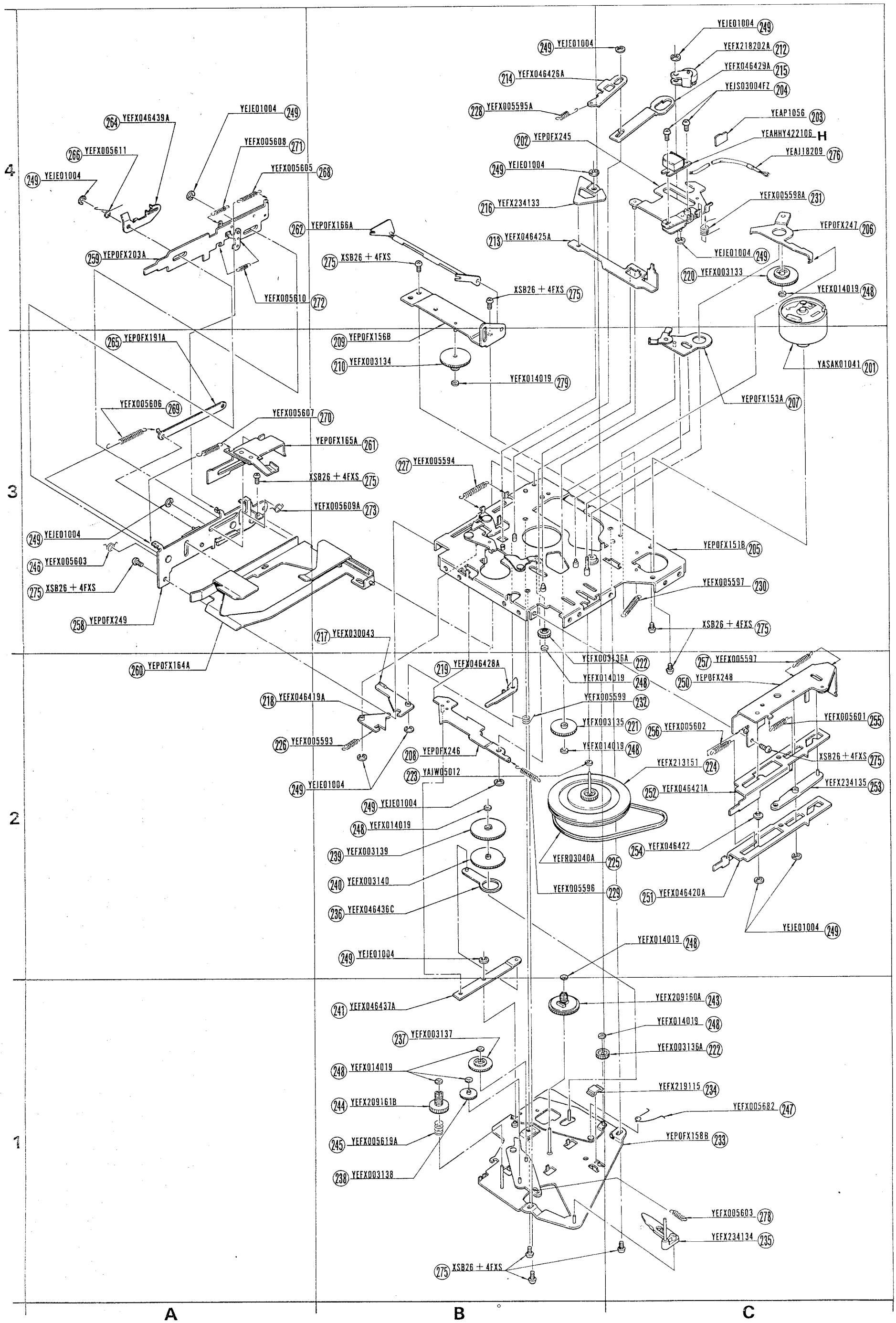




CQ-884EG

| Ref. No. | Part No. | Part Name & Description | Pcs Set | Remarks |
|---|---|---|---|---|
| M262 (4-A) | YEP0FX166A | Guide Arm Sub Ass'y | 1 | |
| M264 (4-A) | YEFX046439A | Switch Hook (A) | 1 | |
| M265 (3-A) | YEP0FX191A | Coupling Link Ass'y | 1 | |
| M266 (4-A) | YEFX005611 | Click Spring | 1 | |
| M268 (4-B) | YEFX005605 | Eject Lever Spring | 1 | |
| M269 (3-A) | YEFX005606 | Cassette Loading Spring | 1 | |
| M270 (3-B) | YEFX005607 | Eject Spring | 1 | |
| M271 (4-A) | YEFX005608 | Switch Selector Spring | 1 | |
| M272 (4-B) | YEFX005610 | Switch Hook Spring | 1 | |
| M273 (3-B) | YEFX005609A | Cassette Guide Stopper Spring | 1 | |
| M274 | YEFX005661A | Spring | 1 | |
| M275 | XSB26 + 4FXS | ⊕ Screw, Bind 2.6mmø x 4mm | 10 | |
| M276 (4-C) | YEAJ18209 | Head Wire, Shielded | 1 | |
| M278 (1-C) | YEFX005603 | FR Lock Spring | 1 | |

| Ref. No. | Part No. | Part Name & Description | Pcs Set | Remarks |
|---|---|---|---|---|
| **ICs AND TRANSISTORS** | | | | |
| **FM RF BLOCK** | | | | |
| IC51 | AN7254 | FM Conv., IF Amp | 1 | |
| Q51 | YEAN3SK81 | FM RF Amp | 1 | |
| Q52 | 2SC1047 | FM IF Amp | 1 | |
| Q53 | 2SD636 | DX/LOC Control | 1 | |
| **RADIO & AUDIO BLOCK** | | | | |
| IC101 | YEAMLA1130 | AM RF Amp, Conv., IF Amp | 1 | |
| IC150 | AN7256 | FM IF Amp w/Detector | 1 | |
| IC152 | YEAMNJM78L08 | Voltage Stabilizer | 1 | |
| IC301 | YEAMLA4440 | AF Power Amp | 1 | |
| IC601 | YEAMPD4053B | DK Decoder | 1 | |
| IC801 | YEAMNJM78L05 | Voltage Stabilizer | 1 | |
| IC802 | YEAMUPC78M05 | Voltage Stabilizer | 1 | |
| IC803 | YEAMUPB553 | Prescaler | 1 | |
| IC804 | YEAMBA618 | LED Driver | 1 | |
| IC805 | YEMUPA53C | LED Driver | 1 | |
| IC806 | YEAM1704-012 | Microcomputer | 1 | |
| IC850 | YEAMHH02S | Search Trigger | 1 | |
| IC851 | YEAMHH03S | Search Trigger | 1 | |
| Q101, 102 103, 106 | 2SD636 | | 17 | |
| 108, 110 152, 801 | | | | |
| 804, 806 850 | | | | |
| 853, 251 351 | | | | |
| 807, 808 810 | | | | |
| Q803,805,852 | 2SB641 | | 3 | |
| Q107, 109 153, 802 | 2SB643 | | 4 | |
| Q105 | 2SC2206 | | 1 | |







| Ref. No. | Part No. | Part Name & Description | Pcs Set | Remarks |
|---|---|---|---|---|
| Q809 | YEAN2SK49F | Low Pass Filter | 1 | |
| Q104 | YEAN2SK117BL | | 1 | |
| **TAPE & VF BLOCK** | | | | |
| IC151 | YEAMLA2200 | SK Decoder | 1 | |
| IC221 | YEAMLA3161 | Tape EQ Amp | 1 | |
| IC500 | AN6130N | FM INQ | 1 | |
| IC501 | YEAMNJM78L08 | Voltage Stabilizer | 1 | |
| IC551 | YEAMBA1350 | FM MPX | 1 | |
| IC615 | YEAMNJM4558A | AF Amp | 1 | |
| Q151, 222 551, 552 | 2SD636 | FM IF Amp | 7 | |
| 553, 615 616 | | | | |
| Q221 | 2SB643 | Muting | 1 | |

| Ref. No. | Part No. | Part Name & Description | Pcs Set | Remarks |
|---|---|---|---|---|
| **DIODES** | | | | |
| **FM RF BLOCK** | | | | |
| Q51, 52, 53 | YEADBB204B | FM Varactor | 3 | |
| **RADIO & AUDIO BLOCK** | | | | |
| D101, 102 104, 105 | MA150 | AM AGC, Switching | 29 | |
| 109, 110 115, 119 | | | | |
| 120, 121 155, 156 | | | | |
| 601, 602 801, 815 | | | | |
| 816, 817 818, 819 | | | | |
| 820,821 822,823 | | | | |
| 825, 826 857, 861 | | | | |
| 106, 117 260, 829 | | | | |
| D812 | MA27TA | Low Pass Filter | 1 | |
| D351 | YEAD030 | Switching | 1 | |
| D813,814,827 | YEADWZ050 | Voltage Stabilizer | 3 | |
| D103,108,111 | YEADSVC321CD | AM Varactor | 1 | |
| D810,850 | YEAD024 | Voltage Stabilizer | 1 | |
| D852 | MA150 | AM AGC, Switching | 1 | |
| D860 | LN543GKHMC | LED | 1 | |
| **TAPE & VF BLOCK** | | | | |
| D151, 152 153, 154 | MA150 | Switching | 8 | |
| 221, 222 501, 504 | | | | |

## CAPACITORS

### FM RF BLOCK

| Ref. No. | Part No. | Part Name & Description | Pcs Set | Remarks |
|---|---|---|---|---|
| C51 | YECCD1H100FM | 10 PF 50WV ±1 PF Ceramic | 1 | |
| C52 | YECCD1H080DM | 8 PF 50WV ±0.5 PF Ceramic | 1 | |
| C53 | YECKD05103Z | 0.01 MFD 50WV +80, −20% Ceramic | 1 | |
| C55 | YECKD05471K | 470 PF 50WV ±10% Ceramic | 1 | |
| C56 | YECKD05103Z | 0.01 MFD 50WV +80, −20% Ceramic | 1 | |
| C57 | YECKD05471K | 470 PF 50WV ±10% Ceramic | 1 | |
| C58 | YECKD05103Z | 0.01 MFD 50WV +80, −20% Ceramic | 1 | |
| C59 | YECKD05103Z | 0.01 MFD 50WV +80, −20% Ceramic | 1 | |
| C60 | YECKD05471K | 470 PF 50WV ±10% Ceramic | 1 | |
| C61 | YECKD1H040DM | 4 PF 50WV ±0.5 PF Ceramic | 1 | |
| C64 | YECKD05103Z | 0.01 MFD 50WV +80, −20% Ceramic | 1 | |
| C65 | YECCD1H330KM | 33 PF 50WV ±10% Ceramic | 1 | |
| C66 | YECCD1H010CM | 1 PF 50WV ±0.25PF Ceramic | 1 | |
| C67 | YECCD1H150KM | 15 PF 50WV ±10% Ceramic | 1 | |
| C68 | YECCD1H080DM | 8 PF 50WV ±0.5 PF Ceramic | 1 | |
| C70 | YECCD1H080DM | 8 PF 50WV ±0.5 PF Ceramic | 1 | |
| C71 | YECKD05103Z | 0.01 MFD 50WV +80, −20% Ceramic | 1 | |
| C72 | YECKD05103Z | 0.01 MFD 50WV +80, −20% Ceramic | 1 | |
| C73 | YECKD05103Z | 0.01 MFD 50WV +80, −20% Ceramic | 1 | |
| C75 | ECEA1AK330 | 33 MFD 10WV Electrolytic | 1 | |
| C80 | YECCD1H060DM | 6 PF 50WV ±0.5 PF Ceramic | 1 | |
| C81 | ECEA1EK4R7 | 4.7 MFD 25WV Electrolytic | 1 | |
| C82 | YECKD05471K | 470 MFD 50WV ±10% Ceramic | 1 | |
| C84 | YECKD05103K | 0.01 MFD 50WV ±10% Ceramic | 1 | |
| C108 | YECCD1E223KB | 0.022 MFD 25WV ± 10% Ceramic | 1 | |

### RADIO & AUDIO BLOCK

| Ref. No. | Part No. | Part Name & Description | Pcs Set | Remarks |
|---|---|---|---|---|
| C101 | YECKD05103Z | 0.01 MFD 50WV +80, −20% Ceramic | 1 | |
| C102 | YECKD05103Z | 0.01 MFD 50WV +80, −20% Ceramic | 1 | |
| C105 | YECQX1H473M | 0.047 MFD 50WV ±20% Polyester | 1 | |
| C106 | YECCD1E223KB | 0.022 MFD 25WV ±10% Ceramic | 1 | |
| C107 | YECCD1E273KB | 0.027 MFD 25WV ±10% Ceramic | 1 | |
| C110 | YECKD05103Z | 0.01 MFD 50WV +80, −20% Ceramic | 1 | |
| C112 | YECKD05103Z | 0.01 MFD 50WV +80, −20% Ceramic | 1 | |
| C113 | YECKD05103Z | 0.01 MFD 50WV +80, −20% Ceramic | 1 | |
| C114 | YECCD12104M | 0.1 MFD 25WV ±20% Ceramic | 1 | |
| C115 | YECKD05103Z | 0.01 MFD 50WV +80, −20% Ceramic | 1 | |
| C116 | YECCD1H221JM | 220 PF 50WV ±5% Ceramic | 1 | |
| C118 | YECCD1H271KM | 270 PF 50WV ±10% Ceramic | 1 | |
| C119 | YECCD1H221JM | 220 PF 50WV ±5% Ceramic | 1 | |
| C120 | YECKD05103Z | 0.01 MFD 50WV +80, −20% Ceramic | 1 | |
| C122 | YECKD05103Z | 0.01 MFD 50WV +80, −20% Ceramic | 1 | |
| C123 | YECCD1H100FM | 10 PF 50WV ±1 PF Ceramic | 1 | |
| C124 | YECQX1H223M | 0.022 MFD 50WV ±20% Polyester | 1 | |
| C125 | YECQX1H223M | 0.022 MFD 50WV ±20% Polyester | 1 | |
| C127 | YECKD05103Z | 0.01 MFD 50WV +80, −20% Ceramic | 1 | |
| C129 | YECKD05103Z | 0.01 MFD 50WV +80, −20% Ceramic | 1 | |
| C130 | ECEA1AS470 | 47 MFD 10WV Electrolytic | 1 | |
| C131 | YECKD05103Z | 0.01 MFD 50WV +80, −20% Ceramic | 1 | |
| C133 | YECQX1H222K | 0.0022 MFD 50WV ±10% Polyester | 1 | |
| C134 | YECQX1H223M | 0.022 MFD 50WV ±20% Polyester | 1 | |
| C135 | YECKD05103Z | 0.01 MFD 50WV +80, −20% Ceramic | 1 | |
| C136 | ECEA1CS330 | 33 MFD 16WV Electrolytic | 1 | |
| C137 | ECEA1HKR47 | 0.47 MFD 50WV Electrolytic | 1 | |
| C138 | YECCD1H030DM | 3 PF 50WV ±0.5 PF Ceramic | 1 | |
| C139 | YECCD1E223KB | 0.022 MFD 25WV ±10% Ceramic | 1 | |
| C140 | YECCD1E223KB | 0.022 MFD 25WV ±10% Ceramic | 1 | |
| C141 | ECEA1CS100 | 10 MFD 16WV Electrolytic | 1 | |
| C142 | YECQX1H153M | 0.015 MFD 50WV ±20% Polyester | 1 | |

| Ref. No. | Part No. | Part Name & Description | Pcs Set | Remarks |
|---|---|---|---|---|
| C143 | YECKD05103Z | 0.01 MFD 50WV +80, –20% Ceramic | 1 | |
| C144 | ECEA1CS330 | 33 MFD 16WV Electrolytic | 1 | |
| C145 | ECEA1HS2R2 | 2.2 MFD 50WV Electrolytic | 1 | |
| C146 | ECEA1AS101 | 100 MFD 10WV Electrolytic | 1 | |
| C147 | YECQX1H223M | 0.022 MFD 50WV ±20% Polyester | 1 | |
| C148 | ECEA1CS100 | 10 MFD 16WV Electrolytic | 1 | |
| C149 | ECEA1HK2R2 | 2.2 MFD 50WV Electrolytic | 1 | |
| C151 | YECQX1H223M | 0.022 MFD 50WV ±20% Polyester | 1 | |
| C152 | YECQX1H223M | 0.022 MFD 50WV ±20% Polyester | 1 | |
| C153 | YECQX1H103M | 0.01 MFD 50WV ±20% Polyester | 1 | |
| C154 | YECQX1H103M | 0.01 MFD 50WV ±20% Polyester | 1 | |
| C156 | ECEA1CS221 | 220 MFD 16WV Electrolytic | 1 | |
| C157 | YECQX1H223M | 0.022 MFD 50WV ±20% Polyester | 1 | |
| C158 | YECCD1H101KM | 100 PF 50WV ±10% Ceramic | 1 | |
| C159 | YECKD05103Z | 0.01 MFD 50WV +80, – 20% Ceramic | 1 | |
| C160 | YECQX1H223M | 0.022 MFD 50WV ±20% Polyester | 1 | |
| C161 | ECEA1HN010S | 1 MFD 50WV Electrolytic | 1 | |
| C180 | ECEA1CK100 | 10 MFD 16WV Electrolytic | 1 | |
| C252 | ECEA1CK100 | 10 MFD 16WV Electrolytic | 1 | |
| C253 | ECEA1CS100 | 10 MFD 16WV Electrolytic | 1 | |
| C254 | YECQX1H393M | 0.039 MFD 50WV ±20% Polyester | 1 | |
| C255 | ECSF35ER22X1 | 0.22 MFD 35WV Tantalum | 1 | |
| C256 | YECQX1H472K | 0.0047 MFD 50WV ±10% Polyester | 1 | |
| C257 | ECSF35ER22X1 | 0.22 MFD 35WV Tantalum | 1 | |
| C260 | ECEA1AS101 | 100 MFD 10WV Electrolytic | 1 | |
| C261 | ECEA0JS330 | 33 MFD 6WV Electrolytic | 1 | |
| C262 | ECQV05104JZ | 0.1 MFD 50WV ±5% Polyester | 1 | |
| C263 | ECEAKV102WX | 1000 MFD 16WV Electrolytic | 1 | |
| C264 | ECEA0JS101 | 100 MFD 6WV Electrolytic | 1 | |
| C265 | YECQX1H102K | 0.001 MFD 50WV ±10% Polyester | 1 | |
| C266 | YECKD05103Z | 0.01 MFD 50WV +80, – 20% Ceramic | 1 | |
| C267 | YECKD05103Z | 0.01 MFD 50WV +80, – 20% Ceramic | 1 | |
| C268 | YECCL510354 | 1000 PF Feedthrough | 1 | |
| C269 | YECCL55B22M | Feedthrough | 1 | |

| Ref. No. | Part No. | Part Name & Description | Pcs Set | Remarks |
|---|---|---|---|---|
| C270 | YECCD1E472KB | 0.0047 MFD 25WV ±10% Ceramic | 1 | |
| C271 | YECKD05103Z | 0.01 MFD 50WV +80, – 20% Ceramic | 1 | |
| C272 | YECKD05103Z | 0.01 MFD 50WV +80, – 20% Ceramic | 1 | |
| C352 | ECEA1CK100 | 10 MFD 16WV Electrolytic | 1 | |
| C353 | ECEA1CS100 | 10 MFD 16WV Electrolytic | 1 | |
| C354 | YECQX1H393M | 0.039 MFD 50WV ±20% Polyester | 1 | |
| C355 | ECSF35ER22X1 | 0.22 MFD 35WV Tantalum | 1 | |
| C356 | YECQX1H472K | 0.0047 MFD 50WV ±10% Polyester | 1 | |
| C357 | ECSF35ER22X1 | 0.22 MFD 35WV Tantalum | 1 | |
| C358 | ECEA1CS221 | 220 MFD 16WV Electrolytic | 1 | |
| C359 | ECEA0JS101 | 100 MFD 6WV Electrolytic | 1 | |
| C360 | ECEA1AS101 | 100 MFD 10WV Electrolytic | 1 | |
| C362 | ECQV05104JZ | 0.1 MFD 50WV ±5% Polyester | 1 | |
| C363 | ECEA1CV102WX | 1000 MFD 16WV Electrolytic | 1 | |
| C364 | ECEA1CS222SZ | 2200 MFD 16WV Electrolytic | 1 | |
| C365 | YECCD1H271KM | 270 PF 50WV ±10% Ceramic | 1 | |
| C366 | YECCD1E472KB | 0.0047 MFD 25WV ±10% Ceramic | 1 | |
| C601 | ECEA0JS470 | 47 MFD 6WV Electrolytic | 1 | |
| C602 | ECEA1HS010 | 1 MFD 50WV Electrolytic | 1 | |
| C603 | ECEA1EK4R7 | 4.7 MFD 25WV Electrolytic | 1 | |
| C604 | ECEA1HN010S | 1 MFD 50WV Electrolytic | 1 | |
| C605 | ECEA1HN010S | 1 MFD 50WV Electrolytic | 1 | |
| C606 | ECEA1EK4R7 | 4.7 MFD 25WV Electrolytic | 1 | |
| C801 | ECEA0JS101 | 100 MFD 6WV Electrolytic | 1 | |
| C802 | ECEA1CS101 | 100 MFD 16WV Electrolytic | 1 | |
| C803 | ECEA1CS331 | 330 MFD 16WV Electrolytic | 1 | |
| C804 | YECCD1E102KB | 0.001 MFD 25WV ±10% Ceramic | 1 | |
| C805 | YECKD05103Z | 0.01 MFD 50WV +80, – 20% Ceramic | 1 | |
| C806 | ECEA0JS101 | 100 MFD 6WV Electrolytic | 1 | |
| C807 | ECEA1CS100 | 10 MFD 16WV Electrolytic | 1 | |
| C808 | YECKD05103Z | 0.01 MFD 50WV +80, – 20% Ceramic | 1 | |
| C809 | YECCD1E104KB | 0.1 MFD 25WV ±10% Ceramic | 1 | |
| C810 | YECKD05103Z | 0.01 MFD 50WV +80, – 20% Ceramic | 1 | |
| C811 | ECEA0JS221 | 220 OHM 6WV Electrolytic | 1 | |

| Ref. No. | Part No. | Part Name & Description | Pcs Set | Remarks |
|---|---|---|---|---|
| C812 | YECCD1H470KM | 22 PF 50WV ±10% Ceramic | 1 | |
| C813 | YECCD1H220KM | 22 PF 50WV ±10% Ceramic | 1 | |
| C814 | YECKD05103Z | 0.01 MFD 50WV +80, −20% Ceramic | 1 | |
| C815 | YECKD05103Z | 0.01 MFD 50WV +80, −20% Ceramic | 1 | |
| C816 | ECSF16E4R7 | 4.7 MFD 16WV Tantalum | 1 | |
| C817 | YECKD05103Z | 0.01 MFD 50WV +80, −20% Ceramic | 1 | |
| C818 | ECEA1CS101 | 100 MFD 16WV Electrolytic | 1 | |
| C819 | ECEA1CS100 | 10 MFD 16WV Electrolytic | 1 | |
| C820 | ECEA0JS470 | 47 MFD 6WV Electrolytic | 1 | |
| C821 | YECKD05103Z | 0.01 MFD 50WV +80, −20% Ceramic | 1 | |
| C822 | YECCD1H220KM | 22 PF 50WV ±10% Ceramic | 1 | |
| C823 | YECCD1E472KB | 0.0047 MFD 25WV ±10% Ceramic | 1 | |
| C824 | YECCD1E472KB | 0.0047 MFD 25WV ±10% Ceramic | 1 | |
| C850 | YECKD05103Z | 0.01 MFD 50WV +80, −20% Ceramic | 1 | |
| C851 | YECCD1H220KM | 22 PF 50WV ±10% Ceramic | 1 | |
| C852 | ECEA1AS470 | 47 MFD 10WV Electrolytic | 1 | |
| C853 | ECSF35ER22X1 | 0.22 MFD 35WV Tantalum | 1 | |
| | | | | |
| | | | | |
| | | | | |
| | | | | |
| | | | | |
| | | | | |

## TAPE & VF BLOCK

| Ref. No. | Part No. | Part Name & Description | Pcs Set | Remarks |
|---|---|---|---|---|
| C162 | YECCD1H181KM | 180 PF 50WV ±10% Ceramic | 1 | |
| C163 | YECQX1H333M | 0.033 MFD 50WV ±20% Polyester | 1 | |
| C164 | ECEA1ES4R7 | 4.7 MFD 25WV Electrolytic | 1 | |
| C165 | ECEA1HS010 | 1 MFD 50WV Electrolytic | 1 | |
| C166 | ECEA1ES3R3 | 3.3 MFD 25WV Electrolytic | 1 | |
| C167 | YECQP2A391J | 390 PF 100 WV ±5% Polyester | 1 | |
| C169 | ECEA1CS101 | 100 MFD 16WV Electrolytic | 1 | |
| C170 | ECEA1AS101 | 100 MFD 10WV Electrolytic | 1 | |
| C171 | ECEA1CS470 | 47 MFD 16WV Electrolytic | 1 | |

| Ref. No. | Part No. | Part Name & Description | Pcs Set | Remarks |
|---|---|---|---|---|
| C172 | ECEA1HKR33 | 0.33 MFD 50WV Electrolytic | 1 | |
| C173 | YECQX1H103M | 0.01 MFD 50WV ±20% Polyester | 1 | |
| C175 | YECQP2A471J | 470 OHM 100WV ±5% Polyester | 1 | |
| C176 | ECEA1ASS221 | 220 MFD 10WV Electrolytic | 1 | |
| C221 | ECEA1HS010 | 1 MFD 50WV Electrolytic | 1 | |
| C222 | ECEA1HK010 | 1 MFD 50WV Electrolytic | 1 | |
| C223 | YECQX1H102K | 0.001 MFD 50WV ±10% Polyester | 1 | |
| C224 | YECQX1H102K | 0.001 MFD 50WV ±10% Polyester | 1 | |
| C225 | ECEA0JS470 | 47 MFD 6WV Electrolytic | 1 | |
| C226 | YECQX1H273M | 0.027 MFD 50WV ±20% Polyester | 1 | |
| C227 | YECQX1H273M | 0.027 MFD 50WV ±20% Polyester | 1 | |
| C228 | ECEA0JS470 | 47 MFD 6WV Electrolytic | 1 | |
| C229 | ECEA1CS221S | 220 MFD 16WV Electrolytic | 1 | |
| C230 | ECEA1CS471 | 470 MFD 16WV Electrolytic | 1 | |
| C231 | ECEA1ES4R7 | 4.7 MFD 25WV Electrolytic | 1 | |
| C501 | YECCD1H151KM | 150 PF 50WV ±10% Ceramic | 1 | |
| C502 | YECQP2A681J | 680 PF 100WV ±5% Polyester | 1 | |
| C503 | YECQX1H122K | 0.0012 MFD 50WV ±10% Ceramic | 1 | |
| C504 | YECQP2A681J | 680 PF 100WV ±5% Polyester | 1 | |
| C505 | ECEA1HS010 | 1 MFD 50WV Electrolytic | 1 | |
| C506 | YECCD1H050CM | 5 PF 50WV ±0.25 PF Ceramic | 1 | |
| C507 | ECEA1CS100 | 10 MFD 16WV Electrolytic | 1 | |
| C508 | YECCD1H680KM | 68 PF 50WV ±10% Ceramic | 1 | |
| C509 | YECQX1H682M | 0.0068 MFD 50WV ±20% Polyester | 1 | |
| C510 | YECQX1H153M | 0.015 MFD 50WV ±20% Polyester | 1 | |
| C511 | YECQX1H333M | 0.033 MFD 50WV ±20% Polyester | 1 | |
| C513 | YECQX1H103M | 0.01 MFD 50WV ±20% Polyester | 1 | |
| C514 | YECQX1H103M | 0.01 MFD 50WV ±20% Polyester | 1 | |
| C515 | ECEA1HKR47 | 0.47 MFD 50WV Electrolytic | 1 | |
| C516 | ECEA1HKR47 | 0.47 MFD 50WV Electrolytic | 1 | |
| C517 | YECQX1H222K | 0.0022 MFD 50WV ±10% Polyester | 1 | |
| C518 | ECEA1CS101 | 100 MFD 16WV Electrolytic | 1 | |
| C519 | ECEA1CS221 | 220 MFD 16WV Electrolytic | 1 | |
| C520 | YECCD1H220KM | 22 PF 50WV ±5% Ceramic | 1 | |

| Ref. No. | Part No. | Part Name & Description | Pcs Set | Remarks |
|---|---|---|---|---|
| C550 | ECEA1CS221 | 220 MFD 16WV Electrolytic | 1 | |
| C551 | YECCD1H221JM | 220 PF 50WV ±5% Ceramic | 1 | |
| C552 | YECQX1H472K | 0.0047 MFD 50WV ±10% Polyester | 1 | |
| C553 | YECQX1H333M | 0.033 MFD 50WV ±20% Polyester | 1 | |
| C554 | YECQX1H333M | 0.033 MFD 50WV ±20% Polyester | 1 | |
| C555 | ECEA1HKR22 | 0.22 MFD 50WV Electrolytic | 1 | |
| C556 | ECEA1HKR47 | 0.47 MFD 50WV Electrolytic | 1 | |
| C557 | ECEA1ES4R7 | 4.7 MFD 25WV Electrolytic | 1 | |
| C558 | YECQP2A681J | 680 PF 100WV 5% Polyester | 1 | |
| C560 | ECEA1HS010 | 1 MFD 50WV Electrolytic | 1 | |
| C561 | YECQX1H103M | 0.01 MFD 50WV ±20% Polyester | 1 | |
| C562 | ECEA1CS100 | 10 MFD 16WV Electrolytic | 1 | |
| C563 | ECEA1ES4R7 | 4.7 MFD 25WV Electrolytic | 1 | |
| C564 | ECEA1CS100 | 10 MFD 16WV Electrolytic | 1 | |
| C565 | ECEA1HS010 | 1 MFD 50WV Electrolytic | 1 | |
| C615 | ECEA1HS010 | 1 MFD 50WV Electrolytic | 1 | |
| C616 | ECEA1HKR33 | 0.33 MFD 50WV Electrolytic | 1 | |
| C617 | ECQV05104J | 0.1 MFD 50WV ±5% Polyester | 1 | |
| C618 | ECEA0JS470 | 47 MFD 6WV Electrolytic | 1 | |
| C619 | ECEA1CS100 | 10 MFD 16WV Electrolytic | 1 | |
| C620 | ECEA1CS470 | 47 MFD 16WV Electrolytic | 1 | |
| C621 | YECQX1H822M | 0.0082 MFD 50WV ±20% Polyester | 1 | |
| C622 | ECEA1HS010 | 1 MFD 50WV Electrolytic | 1 | |
| C623 | ECQV05104J | 0.1 MFD 50WV ±5% Polyester | 1 | |
| C624 | ECQV05104JZ | 0.1 MFD 50WV ±5% Polyester | 1 | |

| Ref. No. | Part No. | Part Name & Description | Pcs Set | Remarks |
|---|---|---|---|---|
| | | **RESISTORS** | | |
| | | **FM RF BLOCK** | | |
| R51 | ERD10EJ104 | 100k OHM 1/8W ±5% Carbon | 1 | |
| R54 | ERD10EJ563 | 56k OHM 1/8W ±5% Carbon | 1 | |
| R55 | ERD10EJ104 | 100k OHM 1/8W ±5% Carbon | 1 | |
| R56 | ERD10EJ473 | 47k OHM 1/8W ±5% Carbon | 1 | |
| R57 | ERD10EJ273 | 27k OHM 1/8W ±5% Carbon | 1 | |
| R58 | ERD10EJ473 | 47k OHM 1/8W ±5% Carbon | 1 | |
| R59 | ERD10EJ104 | 100k OHM 1/8W ±5% Carbon | 1 | |
| R60 | ERD10TJ181 | 180 OHM 1/8W ±5% Carbon | 1 | |
| R61 | ERD10TJ181 | 180 OHM 1/8W ±5% Carbon | 1 | |
| R62 | ERD10EJ102 | 1k OHM 1/8W ±5% Carbon | 1 | |
| R63 | ERD10EJ101 | 100 OHM 1/8W ±5% Carbon | 1 | |
| R64 | ERD10EJ104 | 100k OHM 1/8W ±5% Carbon | 1 | |
| R65 | ERD10EJ822 | 8.2k OHM 1/8W ±5% Carbon | 1 | |
| R66 | ERD10EJ391 | 390 OHM 1/8W ±5% Carbon | 1 | |
| R67 | ERD10EJ104 | 100k OHM 1/8W ±5% Carbon | 1 | |
| R71 | ERD10EJ104 | 100k OHM 1/8W ±5% Carbon | 1 | |
| R72 | ERD10TJ330 | 33 OHM 1/8W ±5% Carbon | 1 | |
| R73 | ERD10TJ330 | 33 OHM 1/8W ±5% Carbon | 1 | |

## RADIO & AUDIO BLOCK

| Ref. No. | Part No. | Part Name & Description | Pcs Set | Remarks |
|---|---|---|---|---|
| R101 | ERD25TJ473 | 47k OHM 1/4W ±5% Carbon | 1 | |
| R102 | ERD25TJ103 | 10k OHM 1/4W ±5% Carbon | 1 | |
| R103 | ERD25TJ271 | 270 OHM 1/4W ±5% Carbon | 1 | |
| R104 | ERD25TJ393 | 39k OHM 1/4W ±5% Carbon | 1 | |
| R105 | ERD25TJ683 | 68k OHM 1/4W ±5% Carbon | 1 | |
| R106 | ERD25TJ333 | 33k OHM 1/4W ±5% Carbon | 1 | |
| R107 | ERD25VJ100 | 10 OHM 1/4W ±5% Carbon | 1 | |
| R108 | ERD25TJ101 | 100 OHM 1/4W ±5% Carbon | 1 | |
| R109 | ERD25TJ472 | 4.7k OHM 1/4W ±5% Carbon | 1 | |
| R110 | ERD25VJ270 | 27 OHM 1/4W ±5% Carbon | 1 | |
| R111 | ERD25VJ224 | 220k OHM 1/4W ±5% Carbon | 1 | |
| R113 | ERD25VJ472 | 4.7k OHM 1/4W ±5% Carbon | 1 | |
| R114 | ERD25VJ104 | 100k OHM 1/4W ±5% Carbon | 1 | |
| R115 | ERD25VJ472 | 4.7k OHM 1/4W ±5% Carbon | 1 | |
| R116 | ERD25VJ104 | 100k OHM 1/4W ±5% Carbon | 1 | |
| R117 | ERD25TJ564 | 560k OHM 1/4W ±5% Carbon | 1 | |
| R118 | ERD25TJ472 | 4.7k OHM 1/4W ±5% Carbon | 1 | |
| R119 | ERD25TJ331 | 330 OHM 1/4W ±5% Carbon | 1 | |
| R120 | ERD25VJ104 | 100k OHM 1/4W ±5% Carbon | 1 | |
| R121 | ERD25VJ473 | 47k OHM 1/4W ±5% Carbon | 1 | |
| R122 | ERD25VJ470 | 47 OHM 1/4W ±5% Carbon | 1 | |
| R123 | ERD25VJ221 | 220 OHM 1/4W ±5% Carbon | 1 | |
| R124 | ERD25VJ682 | 6.8k OHM 1/4W ±5% Carbon | 1 | |
| R125 | ERD25VJ152 | 1.5k OHM 1/4W ±5% Carbon | 1 | |
| R126 | ERD25VJ223 | 22k OHM 1/4W ±5% Carbon | 1 | |
| R128 | ERD25VJ473 | 47k OHM 1/4W ±5% Carbon | 1 | |
| R130 | ERD10TJ153 | 15k OHM 1/8W ±5% Carbon | 1 | |
| R137 | ERD25VJ224 | 220k OHM 1/4W ±5% Carbon | 1 | |
| R138 | ERD25VJ822 | 8.2k OHM 1/4W ±5% Carbon | 1 | |
| R139 | ERD10TJ103 | 10k OHM 1/8W ±5% Carbon | 1 | |
| R140 | ERD25TJ101 | 100 OHM 1/4W ±5% Carbon | 1 | |
| R141 | ERD25VJ681 | 680 OHM 1/4W ±5% Carbon | 1 | |
| R142 | ERD25TJ473 | 47k OHM 1/4W ±5% Carbon | 1 | |
| R143 | ERD25TJ102 | 1k OHM 1/4W ±5% Carbon | 1 | |
| R144 | ERD25TJ331 | 330 OHM 1/4W ±5% Carbon | 1 | |
| R145 | ERD25TJ473 | 47k OHM 1/4W ±5% Carbon | 1 | |
| R146 | ERD25TJ332 | 3.3k OHM 1/4W ±5% Carbon | 1 | |
| R147 | ERD25TJ102 | 1k OHM 1/4W ±5% Carbon | 1 | |
| R150 | ERD25TJ331 | 330 OHM 1/4W ±5% Carbon | 1 | |
| R152 | ERD25VJ331 | 330 OHM 1/4W ±5% Carbon | 1 | |
| R153 | ERD25VJ391 | 390 OHM 1/4W ±5% Carbon | 1 | |
| R154 | ERD25TJ101 | 100 OHM 1/4W ±5% Carbon | 1 | |
| R155 | ERD25VJ272 | 2.7k OHM 1/4W ±5% Carbon | 1 | |
| R156 | ERD25TJ153 | 15k OHM 1/4W ±5% Carbon | 1 | |
| R182 | ERD25VJ473 | 47k OHM 1/4W ±5% Carbon | 1 | |
| R183 | ERD25TJ102 | 1k OHM 1/4W ±5% Carbon | 1 | |
| R184 | ERD25TJ473 | 47k OHM 1/4W ±5% Carbon | 1 | |
| R199 | ERD25TJ560 | 56 OHM 1/4W ±5% Carbon | 1 | |
| R255 | ERD25VJ103 | 10k OHM 1/4W ±5% Carbon | 1 | |
| R257 | ERD25TJ272 | 2.7k OHM 1/4W ±5% Carbon | 1 | |
| R258 | ERD25VJ153 | 15k OHM 1/4W ±5% Carbon | 1 | |
| R259 | ERD25VJ105 | 1M OHM 1/4W ±5% Carbon | 1 | |
| R261 | ERD25VJ4R7 | 4.7 OHM 1/4W ±5% Carbon | 1 | |
| R262 | ERD25VJ274 | 270k OHM 1/4W ±5% Carbon | 1 | |
| R263 | ERD25VJ471 | 470 OHM 1/4W ±5% Carbon | 1 | |
| R264 | ERD25VJ182 | 1.8k OHM 1/4W ±5% Carbon | 1 | |
| R265 | ERD25VJ562 | 5.6k OHM 1/4W ±5% Carbon | 1 | |
| R266 | ERD25VJ472 | 4.7k OHM 1/4W ±5% Carbon | 1 | |
| R267 | ERD25TJ560 | 56 OHM 1/4W ±5% Carbon | 1 | |
| R268 | ERD25TJ103 | 10k OHM 1/4W ±5% Carbon | 1 | |
| R269 | ERD25FJ1R0 | 1 OHM 1/4W ±5% Carbon | 1 | |
| R270 | ERD25TJ101 | 100 OHM 1/4W ±5% Carbon | 1 | |
| R355 | ERD25VJ103 | 10k OHM 1/4W ±5% Carbon | 1 | |
| R357 | ERD25TJ272 | 2.7k OHM 1/4W ±5% Carbon | 1 | |
| R358 | ERD25VJ153 | 15k OHM 1/4W ±5% Carbon | 1 | |
| R359 | ERD25VJ105 | 1M OHM 1/4W ±5% Carbon | 1 | |

| Ref. No. | Part No. | Part Name & Description | Pcs Set | Remarks |
|---|---|---|---|---|
| R360 | ERD25TJ562 | 5.6k OHM 1/4W ±5% Carbon | 1 | |
| R361 | ERD25VJ4R7 | 4.7 OHM 1/4W ±5% Carbon | 1 | |
| R362 | ERD25VJ274 | 270k OHM 1/4W ±5% Carbon | 1 | |
| R363 | ERD25VJ221 | 220 OHM 1/4W ±5% Carbon | 1 | |
| R364 | ERD25VJ182 | 1.8k OHM 1/4W ±5% Carbon | 1 | |
| R365 | ERD25VJ272 | 2.7k OHM 1/4W ±5% Carbon | 1 | |
| R366 | ERD25VJ472 | 4.7k OHM 1/4W ±5% Carbon | 1 | |
| R555 | ERD25TJ103 | 10k OHM 1/4W ±5% Carbon | 1 | |
| R601 | ERD25VJ102 | 1k OHM 1/4W ±5% Carbon | 1 | |
| R602 | ERD25VJ102 | 1k OHM 1/4W ±5% Carbon | 1 | |
| R603 | ERD25VJ474 | 470k OHM 1/4W ±5% Carbon | 1 | |
| R604 | ERD25VJ474 | 470k OHM 1/4W ±5% Carbon | 1 | |
| R605 | ERD25VJ474 | 470k OHM 1/4W ±5% Carbon | 1 | |
| R606 | ERD25VJ474 | 470k OHM 1/4W ±5% Carbon | 1 | |
| R607 | ERD25VJ474 | 470k OHM 1/4W ±5% Carbon | 1 | |
| R608 | ERD25VJ474 | 470k OHM 1/4W ±5% Carbon | 1 | |
| R609 | ERD25VJ333 | 330k OHM 1/4W ±5% Carbon | 1 | |
| R610 | ERD25VJ153 | 15k OHM 1/4W ±5% Carbon | 1 | |
| R611 | ERD25VJ153 | 15k OHM 1/4W ±5% Carbon | 1 | |
| R612 | ERD25VJ104 | 100k OHM 1/4W ±5% Carbon | 1 | |
| R613 | ERD25VJ104 | 100k OHM 1/4W ±5% Carbon | 1 | |
| R614 | ERD25VJ333 | 330k OHM 1/4W ±5% Carbon | 1 | |
| R801 | ERD25TJ103 | 10k OHM 1/4W ±5% Carbon | 1 | |
| R802 | ERD25TJ102 | 1k OHM 1/4W ±5% Carbon | 1 | |
| R803 | ERD25VJ472 | 4.7k OHM 1/4W ±5% Carbon | 1 | |
| R804 | ERD25TJ473 | 47k OHM 1/4W ±5% Carbon | 1 | |
| R805 | ERD25TJ221 | 220 OHM 1/4W ±5% Carbon | 1 | |
| R806 | ERD25TJ562 | 5.6k OHM 1/4W ±5% Carbon | 1 | |
| R807 | ERD25TJ562 | 5.6k OHM 1/4W ±5% Carbon | 1 | |
| R808 | ERD25VJ153 | 15k OHM 1/4W ±5% Carbon | 1 | |
| R809 | ERD25TJ103 | 10k OHM 1/4W ±5% Carbon | 1 | |
| R810 | ERD25TJ563 | 56k OHM 1/4W ±5% Carbon | 1 | |
| R811 | ERD25TJ224 | 220k OHM 1/4W ±5% Carbon | 1 | |
| R812 | ERD25VJ224 | 220k OHM 1/4W ±5% Carbon | 1 | |

| Ref. No. | Part No. | Part Name & Description | Pcs Set | Remarks |
|---|---|---|---|---|
| R813 | ERD25TJ271 | 270 OHM 1/4W ±5% Carbon | 1 | |
| R814 | ERD25TJ270 | 27 OHM 1/4W ±5% Carbon | 1 | |
| R815 | ERD25TJ270 | 27 OHM 1/4W ±5% Carbon | 1 | |
| R816 | ERD25TJ103 | 10k OHM 1/4W ±5% Carbon | 1 | |
| R817 | ERD25TJ103 | 10k OHM 1/4W ±5% Carbon | 1 | |
| R818 | ERD25TJ103 | 10k OHM 1/4W ±5% Carbon | 1 | |
| R819 | ERD25TJ270 | 27 OHM 1/4W ±5% Carbon | 1 | |
| R820 | ERD25TJ270 | 27 OHM 1/4W ±5% Carbon | 1 | |
| R821 | ERD25TJ270 | 27 OHM 1/4W ±5% Carbon | 1 | |
| R822 | ERD25TJ270 | 27 OHM 1/4W ±5% Carbon | 1 | |
| R823 | ERD25TJ270 | 27 OHM 1/4W ±5% Carbon | 1 | |
| R824 | ERD25TJ270 | 27 OHM 1/4W ±5% Carbon | 1 | |
| R825 | ERD25TJ270 | 27 OHM 1/4W ±5% Carbon | 1 | |
| R826 | ERD25TJ474 | 470k OHM 1/4W ±5% Carbon | 1 | |
| R827 | ERD25TJ474 | 470k OHM 1/4W ±5% Carbon | 1 | |
| R828 | ERD25TJ152 | 1.5k OHM 1/4W ±5% Carbon | 1 | |
| R829 | ERD25TJ152 | 1.5k OHM 1/4W ±5% Carbon | 1 | |
| R830 | ERD25TJ102 | 1k OHM 1/4W ±5% Carbon | 1 | |
| R831 | ERD25TJ102 | 1k OHM 1/4W ±5% Carbon | 1 | |
| R832 | ERD25TJ152 | 1.5k OHM 1/4W ±5% Carbon | 1 | |
| R833 | ERD25TJ471 | 470 OHM 1/4W ±5% Carbon | 1 | |
| R834 | ERG1ANJ181 | 180 OHM 1W ±5% Metal Film | 1 | |
| R835 | ERG1ANJ181 | 180 OHM 1W ±5% Metal Film | 1 | |
| R836 | ERD25TJ223 | 22k OHM 1/4W ±5% Carbon | 1 | |
| R837 | ERD25TJ223 | 22k OHM 1/4W ±5% Carbon | 1 | |
| R838 | ERD25TJ223 | 22k OHM 1/4W ±5% Carbon | 1 | |
| R839 | ERD25TJ223 | 22k OHM 1/4W ±5% Carbon | 1 | |
| R840 | ERD25TJ103 | 10k OHM 1/4W ±5% Carbon | 1 | |
| R842 | ERD25TJ561 | 560 OHM 1/4W ±5% Carbon | 1 | |
| R843 | ERD25TJ843 | 84k OHM 1/4W ±5% Carbon | 1 | |
| R844 | ERG1ANJ100 | 10 OHM 1W ±5% Metal Oxide | 1 | |
| R845 | ERG1ANJ330 | 33 OHM 1W ±5% Metal Oxide | 1 | |
| R851 | ERD25VJ332 | 3.3k OHM 1/4W ±5% Carbon | 1 | |
| R852 | ERD25VJ564 | 560k OHM 1/4W ±5% Carbon | 1 | |

| Ref. No. | Part No. | Part Name & Description | | | | Pcs Set | Remarks |
|---|---|---|---|---|---|---|---|
| R853 | ERD25VJ151 | 150 OHM | 1/4W | ±5% | Carbon | 1 | |
| R854 | ERD25VJ331 | 330 OHM | 1/4W | ±5% | Carbon | 1 | |
| R857 | ERD25VJ153 | 15k OHM | 1/4W | ±5% | Carbon | 1 | |
| R858 | ERD25VJ472 | 4.7k OHM | 1/4W | ±5% | Carbon | 1 | |
| R859 | ERD25TJ332 | 3.3k OHM | 1/4W | ±5% | Carbon | 1 | |
| R860 | ERD25VJ473 | 47k OHM | 1/4W | ±5% | Carbon | 1 | |

## TAPE & VF BLOCK

| Ref. No. | Part No. | Part Name & Description | | | | Pcs Set | Remarks |
|---|---|---|---|---|---|---|---|
| R163 | ERD25V102 | 1k OHM | 1/4W | ±5% | Carbon | 1 | |
| R164 | ERD25VJ272 | 2.7k OHM | 1/4W | ±5% | Carbon | 1 | |
| R165 | ERD25VJ392 | 3.9k OHM | 1/4W | ±5% | Carbon | 1 | |
| R166 | ERD25VJ102 | 1k OHM | 1/4W | ±5% | Carbon | 1 | |
| R167 | ERD25VJ123 | 12k OHM | 1/4W | ±5% | Carbon | 1 | |
| R168 | ERD25VJ103 | 10k OHM | 1/4W | ±5% | Carbon | 1 | |
| R170 | ERD25VJ332 | 3.3k OHM | 1/4W | ±5% | Carbon | 1 | |
| R171 | ERD25VJ152 | 1.5k OHM | 1/4W | ±5% | Carbon | 1 | |
| R173 | ERD25VJ221 | 220 OHM | 1/4W | ±5% | Carbon | 1 | |
| R174 | ERD25VJ221 | 220 OHM | 1/4W | ±5% | Carbon | 1 | |
| R175 | ERD25VJ103 | 10k OHM | 1/4W | ±5% | Carbon | 1 | |
| R176 | ERD25VJ472 | 4.7k OHM | 1/4W | ±5% | Carbon | 1 | |
| R177 | ERD25VJ473 | 47k OHM | 1/4W | ±5% | Carbon | 1 | |
| R221 | ERD10TJ470 | 47 OHM | 1/8W | ±5% | Carbon | 1 | |
| R222 | ERD25VJ124 | 120k OHM | 1/4W | ±5% | Carbon | 1 | |
| R223 | ERD25VJ472 | 4.7k OHM | 1/4W | ±5% | Carbon | 1 | |
| R224 | ERD10TJ470 | 47 OHM | 1/8W | ±5% | Carbon | 1 | |
| R225 | ERD25VJ124 | 120k OHM | 1/4W | ±5% | Carbon | 1 | |
| R226 | ERD25VJ472 | 4.7k OHM | 1/4W | ±5% | Carbon | 1 | |
| R227 | ERD25VJ221 | 220 OHM | 1/4W | ±5% | Carbon | 1 | |
| R228 | ERD25VJ473 | 47k OHM | 1/4W | ±5% | Carbon | 1 | |
| R229 | ERD25VJ102 | 1k OHM | 1/4W | ±5% | Carbon | 1 | |
| R230 | ERD25VJ472 | 4.7k OHM | 1/4W | ±5% | Carbon | 1 | |
| R231 | ERX1ANJ1R5 | 1.5 OHM | 1W | ±5% | Metal Film | 1 | |
| R234 | ERD25VJ472 | 4.7k OHM | 1/4W | ±5% | Carbon | 1 | |
| R500 | ERD25VJ474 | 470k OHM | 1/4W | ±5% | Carbon | 1 | |
| R501 | ERD25VJ222 | 2.2k OHM | 1/4W | ±5% | Carbon | 1 | |
| R502 | ERD25VJ222 | 2.2k OHM | 1/4W | ±5% | Carbon | 1 | |
| R503 | ERD25VJ272 | 2.7k OHM | 1/4W | ±5% | Carbon | 1 | |
| R504 | ERD25VJ223 | 22k OHM | 1/4W | ±5% | Carbon | 1 | |
| R505 | ERD25VJ104 | 100k OHM | 1/4W | ±5% | Carbon | 1 | |
| R506 | ERD25VJ332 | 3.3k OHM | 1/4W | ±5% | Carbon | 1 | |
| R507 | ERD25VJ103 | 10k OHM | 1/4W | ±5% | Carbon | 1 | |
| R508 | ERD25VJ682 | 6.8k OHM | 1/4W | ±5% | Carbon | 1 | |
| R509 | ERD25VJ121 | 120 OHM | 1/4W | ±5% | Carbon | 1 | |
| R511 | ERD25VJ102 | 1k OHM | 1/4W | ±5% | Carbon | 1 | |
| R512 | ERD25VJ683 | 68k OHM | 1/4W | ±5% | Carbon | 1 | |
| R514 | ERD25FJ101 | 100 OHM | 1/4W | ±5% | Carbon | 1 | |
| R551 | ERD25VJ332 | 3.3k OHM | 1/4W | ±5% | Carbon | 1 | |
| R552 | ERD25VJ332 | 3.3k OHM | 1/4W | ±5% | Carbon | 1 | |
| R553 | ERD25VJ153 | 15k OHM | 1/4W | ±5% | Carbon | 1 | |
| R554 | ERD25VJ473 | 47k OHM | 1/4W | ±5% | Carbon | 1 | |
| R556 | ERD25VJ222 | 2.2k OHM | 1/4W | ±5% | Carbon | 1 | |
| R557 | ERD25VJ102 | 1k OHM | 1/4W | ±5% | Carbon | 1 | |
| R559 | ERD25VJ101 | 100 OHM | 1/4W | ±5% | Carbon | 1 | |
| R560 | ERD25VJ272 | 2.7k OHM | 1/4W | ±5% | Carbon | 1 | |
| R561 | ERD25VJ472 | 4.7k OHM | 1/4W | ±5% | Carbon | 1 | |
| R562 | ERD25VJ472 | 4.7k OHM | 1/4W | ±5% | Carbon | 1 | |
| R563 | ERD25VJ103 | 10k OHM | 1/4W | ±5% | Carbon | 1 | |
| R564 | ERD25VJ392 | 3.9k OHM | 1/4W | ±5% | Carbon | 1 | |
| R565 | ERD25VJ333 | 33k OHM | 1/4W | ±5% | Carbon | 1 | |

| Ref. No. | Part No. | Part Name & Description | Pcs Set | Remarks |
|---|---|---|---|---|
| R566 | ERD25VJ183 | 18k OHM 1/4W ±5% Carbon | 1 | |
| R567 | ERD25VJ183 | 18k OHM 1/4W ±5% Carbon | 1 | |
| R568 | ERD25VJ333 | 33k OHM 1/4W ±5% Carbon | 1 | |
| R569 | ERD10TJ101 | 100 OHM 1/8W ±5% Carbon | 1 | |
| R570 | ERD25VJ472 | 4.7k OHM 1/4W ±5% Carbon | 1 | |
| R615 | ERD25VJ474 | 470k OHM 1/4W ±5% Carbon | 1 | |
| R616 | ERD25VJ123 | 12k OHM 1/4W ±5% Carbon | 1 | |
| R617 | ERD25VJ222 | 2.2k OHM 1/4W ±5% Carbon | 1 | |
| R618 | ERD25VJ823 | 82k OHM 1/4W ±5% Carbon | 1 | |
| R619 | ERD25VJ683 | 68k OHM 1/4W ±5% Carbon | 1 | |
| R620 | ERD25VJ104 | 100k OHM 1/4W ±5% Carbon | 1 | |
| R621 | ERD25VJ104 | 100k OHM 1/4W ±5% Carbon | 1 | |
| R622 | ERD25VJ221 | 220 OHM 1/4W ±5% Carbon | 1 | |
| R623 | ERD25VJ154 | 150k OHM 1/4W ±5% Carbon | 1 | |
| R624 | ERD25VJ823 | 82k OHM 1/4W ±5% Carbon | 1 | |
| R625 | ERD25VJ563 | 56k OHM 1/4W ±5% Carbon | 1 | |

| Ref. No. | Part No. | Part Name & Description | Pcs Set | Remarks |
|---|---|---|---|---|
| **VARIABLE CAPACITORS** | | | | |
| C54 | ECV1ZW10X53N | 10 PF Trimmer | 1 | |
| C62, 69 | ECV1ZW06X53N | 6 PF Trimmer | 2 | |
| C109,121,126 | ECV1ZW20X53N | 20 PF Trimmer | 3 | |
| C111, 128 | ECV1ZW40X53N | 40 PF Trimmer | 2 | |
| C117 | ECRBA090M13 | 90 PF Trimmer | 1 | |
| **VARIABLE RESISTORS** | | | | |
| VR152, 552 | EVNK4AA00B53 | 5k OHM (B) Semi-fixed | 2 | |
| VR850 | EVNK4AA00B54 | 50k OHM (B) Semi-fixed | 1 | |
| VR253, 353 | EVK1JBS01B15 | 100k OHM (B) Volume Control | 1 | |
| VR252 | EVUUK3027G54 | 50k OHM (C) Balance Control | 1 | |
| VR251,351 | EVUUL3027C54 | 50k OHM (G) | 1 | |
| VR510 | EVNK4AA00B53 | 5k OHM (B) Semi-fixed | 1 | |
| VR551 | EVNK4AA00B14 | 10k OHM (B) Semi-fixed | 1 | |
| VR553 | EVNK4AA00B54 | 50k OHM (B) Semi-fixed | 1 | |
| **COMPONENT COMBINATIONS** | | | | |
| Z500 | EXBS84472K | 4.7k OHM x 4 | 1 | |
| Z511 | EXF3SM04 | 180 PF x 3 | 1 | |

| Ref. No. | Part No. | Part Name & Description | Pcs Set | Remarks |
|---|---|---|---|---|
| | | **CRYSTAL** | | |
| X801 | YEXL43U04500 | 4.5MHz | 1 | |
| X850 | YEXL43U11520 | 11.52MHz | 1 | |
| | | **SWITCH** | | |
| SW221 | YEAS07026 | Tape/Radio Selector Switch | 1 | |
| | | **COILS, TRANSFORMERS AND CERAMIC FILTERS** | | |
| L52 | YELA08N080 | FM ANT Coil | 1 | |
| L53 | YELT08N075 | FM RF Coil | 1 | |
| L54 | YELL08N103 | FM OSC Coil | 1 | |
| L55 | ELEH330KA | FM RF Coil | 1 | |
| L101 | YELA07S081 | AM ANT Coil | 1 | |
| L102 | YELA07S082 | AM ANT Coil | 1 | |
| L103 | YELL07S104 | AM OSC Coil | 1 | |
| L104 | YELL07N089 | AM OSC Coil | 1 | |
| L105 | YELT07S077 | AM RF Coil | 1 | |
| L106 | YELT07S076 | AM RF Coil | 1 | |
| L107 | YELT05N330K | AM RF Coil | 1 | |
| L108 | YELQ07S046 | AM RF Choke Coil | 1 | |
| L150 | ELQS270KB | FM RF Choke Coil | 1 | |
| L151 | YELM10R928 | FM MPX Coil | 1 | |
| L255 | YETQ020F054A | Choke Coil | 1 | |
| L500 | ELM7Q204A | FM MPX Coil | 1 | |
| L801 | ELEH102KA | RF Coil | 1 | |

| Ref. No. | Part No. | Part Name & Description | Pcs Set | Remarks |
|---|---|---|---|---|
| IFT51 | YEIF07S7049 | FM IFT | 1 | |
| IFT101 | YEIA07S7110 | AM IFT | 1 | |
| IFT102 | YEIA07S7111 | AM IFT | 1 | |
| IFT150 | YEIF07S7067 | FM IFT | 1 | |
| IFT500 | YELM07S931 | FM MPX Coil | 1 | |
| IFT850 | EIA7Q201B | AM IFT | 1 | |
| CF51 | YEIN09N5010 | FM Ceramic Filter | 1 | |
| CF101 | YEIN07N5026 | AM Ceramic Filter | 1 | |
| CF150, 151 | YEIN09N5016 | FM Ceramic Filter | 2 | |
| CF850 | YEIN07N5018 | AM Ceramic Filter | 1 | |

MODEL CQ-884EG

| Ref. No. | Part No. | Part Name & Description | Pcs Set | Remarks |
|---|---|---|---|---|
| | | **ACCESSORIES** | | |
| A101 | YAFG04008 | Supporting Strap | 1 | |
| A102 | YEFC05265 | Trim Plate | 1 | |
| A103 | YEFG01839 | Front Bracket | 2 | |
| A104 | YEFX0211077 | Mounting Bracket | 4 | |
| A105 | XSN4 + 10FXS | ⊕ Screw, Pan 4mmø x 10mm | 4 | |
| A106 | YEJV12041 | ⊕ Screw w/Washer | 2 | |
| A107 | XVG5C25FXS | Bolt, Hexagon | 1 | |
| A109 | XWA5BFX | Washer, Spring | 2 | |
| A110 | XWG5FX | Washer, Flat | 2 | |
| A111 | XNG5AFXS | Nut, Hexagon | 2 | |
| A112 | XWC5CFX | Washer, Toothed | 1 | |
| A113 | YEFS01186 | Pad | 1 | |
| | | **PRINTING** | | |
| A120 | YEFM28301 | Instruction Book | 1 | |
| A121 | YEFM99188 | VF MAP | 1 | |

# INITIAL FAILURE PARTS LIST/ANFANGS-FEHLER-ERSATZTEI LLISTE

*NOTE: The packing kit is supplied for a year after discontinued production.*

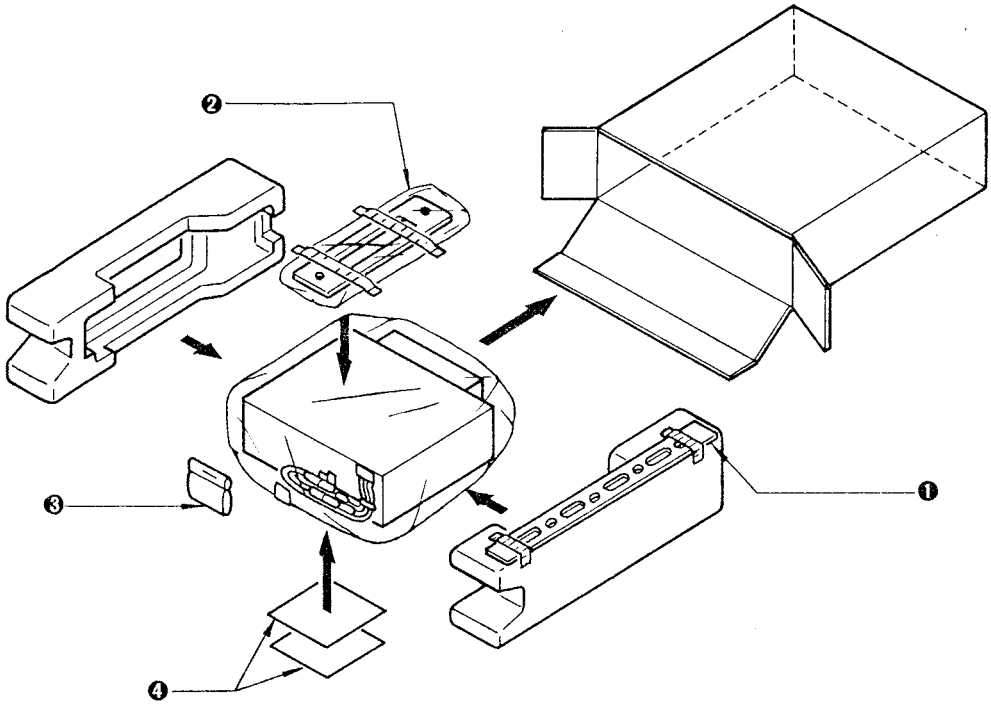


| Item No. | Part No. | Part Name & Description | Q'ty |
|---|---|---|---|
| ❶ | YAFG04008 | Supporting Strap | 1 |
| ❷ | YEFC05265 | Trim Plate | 1 |
| ❸ | YEFG01839 | Front Bracket | 2 |
| | YEFX0211077 | Mounting Bracket | 4 |
| | XSN4 + 10FXS | ⊕ Screw, Pan 4mmø x 10mm | 4 |
| | YEJV12041 | Screw w/Washer | 2 |
| | XVG5C25FXS | Bolt, Hexagon | 2 |
| | XTN5 + 16AFX | ⊕ Screw, Tapping 5mmø x 16mm | 4 |
| | XWA5BFX | Washer, Spring 5mmø | 4 |
| | XWG5FX | Washer, Flat 5mmø | 4 |
| | XNG5AFXS | Nut, Hexagon 5mmø | 2 |
| | XWC5CFX | Washer, Toothed 5mmø | 1 |
| | YEFS01186 | Pad | 1 |
| ❹ | YEFM28301 | Instruction Book | 1 |
| | YEFM99188 | VF Map | 1 |